B.P.R. REG. NO.	STATE	PROJECT NUMBER	SHEET NO.	TOTAL SHEETS
1	MAINE	I-95-6(23)123	1	32

STATE OF MAINE
STATE HIGHWAY COMMISSION

PLANS

WATERVILLE
KENNEBEC COUNTY

MAINE FEDERAL AID INTERSTATE #95
PROJECT NO. I-95-6(23)123 PART 2

TOTAL LENGTH 0.194 MILES

SCALES
PLAN 1 IN. = 50 FT.
PROFILE HOR 1 IN. = 50 FT.
PROFILE VER 1 IN. = 5 FT.
CROSS SECTIONS 1 IN. = 10 FT.

INTERSTATE #95 BRIDGE OVER MESSALONSKEE STREAM
AND QUARRY ROAD RELOCATION

INDEX OF SHEETS

SHEET NO.		
1	TITLE SHEET	
2	TYPICAL SECTIONS	
3	QUANTITIES	
4	GENERAL PLAN	STA. 1036+00 to STA. 1052+00
5	PROFILE	STA. 1037+00 to STA. 1053+00
6	GENERAL PLAN	STA. 1051+00 to STA. 1067+00
7	PROFILE	STA. 1052+00 to STA. 1068+00
8-30	BRIDGE SHEETS	
31-32	CROSS SECTIONS	

CONVENTIONAL SIGNS

STATE OR NATIONAL LINE
COUNTY LINE
TOWN LINE
UNFENCED PROPERTY
FENCE
RIGHT OF WAY LINE
TRAVELED WAY
RAILROAD
RETAINING WALL

SURVEY LINE
CULVERT
DROP INLET
TROLLEY POLE
POWER POLE
TEL. POLE
MARSH
TREES
STONE WALL

Interstate 95 shall be constructed to Top of Gravel Base only, within the Limits indicated on the Plans. Construction of Messalonskee Stream Bridge is included in this Contract.
Other Concurrent Contracts within the Limits of this Project are:
F.A.P. I-95-6(19) Part 2 and
F.A.P. I-95-6(20)

All work contemplated under this Contract to be Governed by and in conformity with the Standard Specifications, Highways and Bridges, Revision of Jan. 1956, except as modified on these Plans and by the Special Provisions

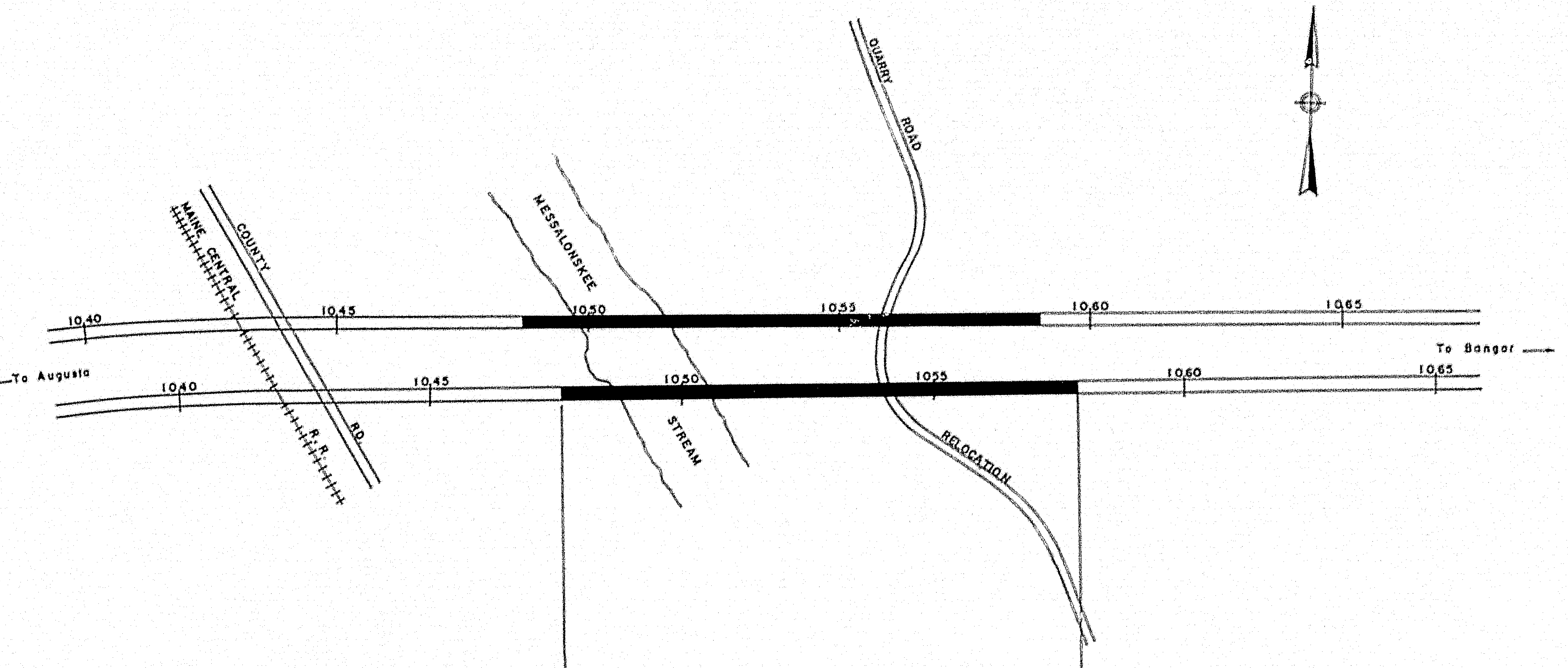

QUARRY ROAD
MESSALONSKEE
MAINE CENTRAL
COUNTY
R.R.
RD.
STREAM
RELOCATION
1040
1045
1050
1055
1060
1065
To Augusta
To Bangor

STA. 1047+56 NORTHBOUND
BEGIN F.A.P. I-95-6(23) PART 2
END F.A.P. I-95-6(19) PART 2

STA. 1057+80 NORTHBOUND
END F.A.P. I-95-6(23) PART 2
BEGIN F.A.P. I-95-6(20) PART 2

LAYOUT PLAN

SCALE 1" = 200'

AS-BUILT
1961

A.D.T. (1960) = 7050
A.D.T. (1980) = 9620
D.H.V. (1980) = 1443
D. (1980) = 65 %
T. (1980) = 15 %
V. (M.P.H.) = 60

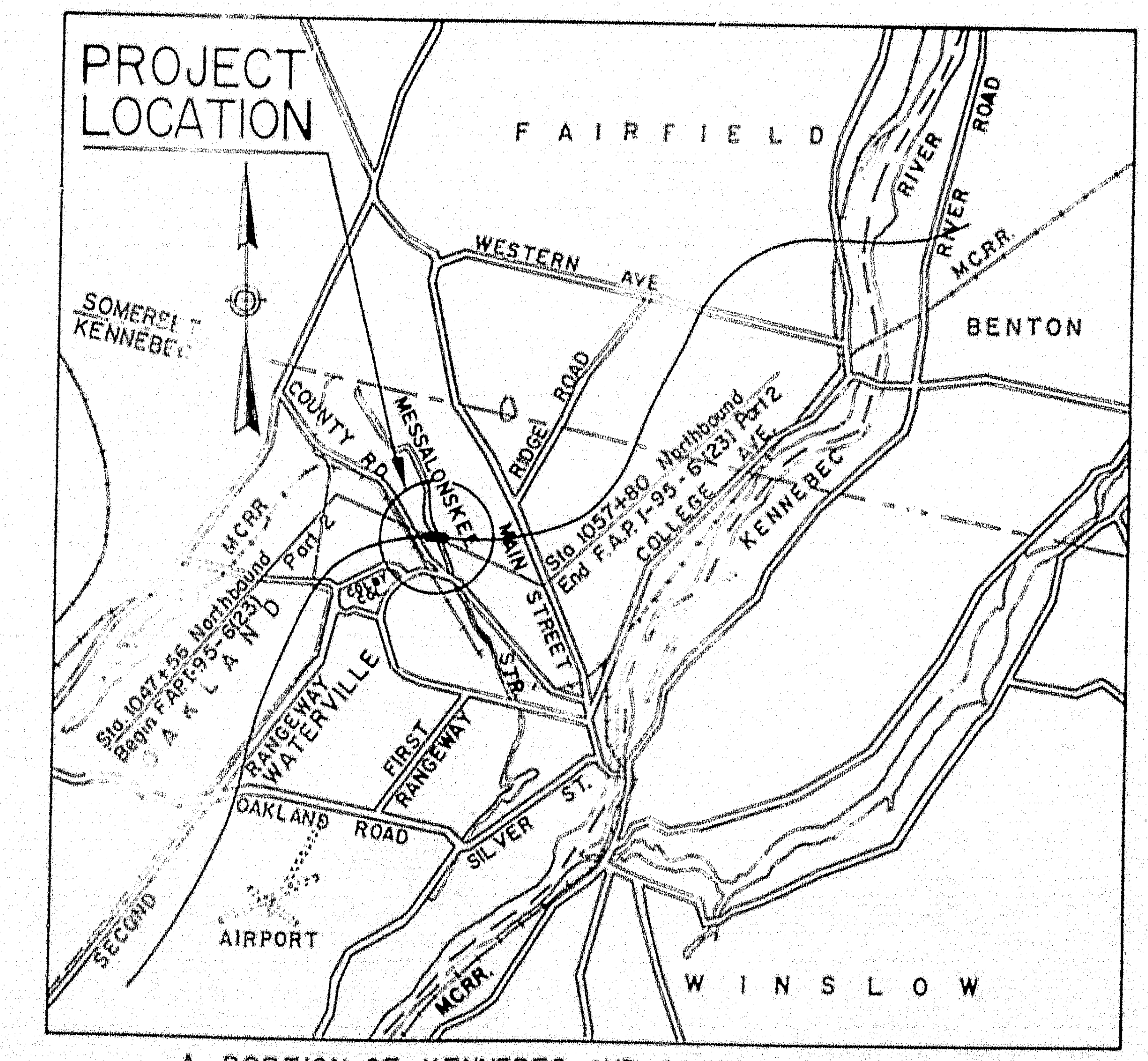

PROJECT LOCATION
FAIRFIELD
WESTERN AVE
RIVER ROAD
MCRR
BENTON
SOMERSET
KENNEBEC
COUNTY RD
MESSALONSKEE
RIDGE ROAD
Sta 1057+80 Northbound End F.A.P. I-95-6(23) Part 2
COLLEGE AVE
KENNEBEC
MAIN STREET
Sta 1047+56 Northbound Begin F.A.P. I-95-6(23) Part 2
MCRR
OAKLAND
WATERVILLE
RANGEWAY
FIRST RANGEWAY
OAKLAND ROAD
SILVER ST.
AIRPORT
SECOND
MCRR
WINSLOW

A PORTION OF KENNEBEC AND SOMERSET COUNTIES

APPROX. SCALE 1 IN = 1 MILE

APPROVED:
MAINE STATE HIGHWAY COMMISSION
David H. Stevens
CHAIRMAN

R. Leon Williams

CHIEF ENGINEER

CONSULTING ENGINEERS
THE CLARKESON ENGINEERING COMPANY, INC.
BOSTON MASS.
CONSULTING ENGINEER
Jan 16, 1959
DATE

DEPARTMENT OF COMMERCE
BUREAU OF PUBLIC ROADS
REGION 1

APPROVED:

DIVISION ENGINEER
DATE

78-166

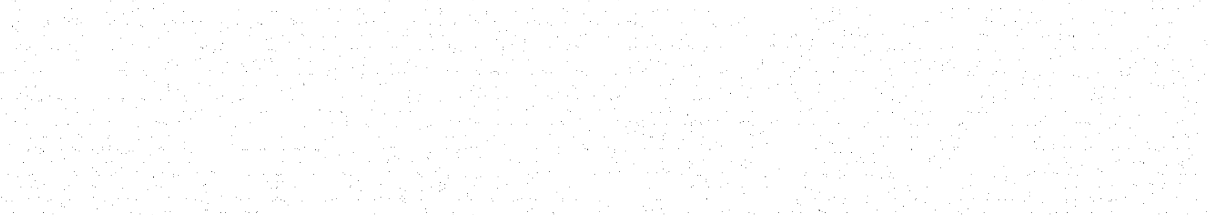

0
1
2
3
4
5
INCHES

B.P.R. REG. NO.	STATE	FED. AID PROJ. NO.	SHEET NO.	TOTAL SHEETS
1	MAINE	I-95-6(23)	2	32

WATERVILLE INTERSTATE

GRADING CONTRACT — STAGE CONSTRUCTION

INTERSTATE #95 TO BE CONSTRUCTED TO TOP OF LOWER COURSE CRUSHED GRAVEL BASE ONLY UNLESS OTHERWISE INDICATED

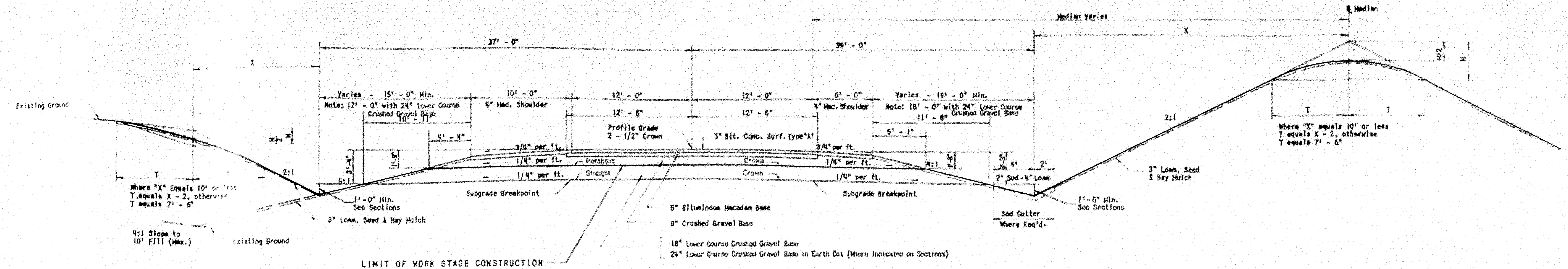
Existing Ground
X
37' - 0"
34' - 0"
Median Varies
℄ Median
X
Varies - 15' - 0" Min.
Note: 17' - 0" with 24" Lower Course Crushed Gravel Base
10' - 11"
10' - 0"
4" Mac. Shoulder
4' - 4"
12' - 0"
12' - 0"
12' - 6"
12' - 6"
Profile Grade
2 - 1/2" Crown
3" Bit. Conc. Surf. Type "A"
6' - 0"
4" Mac. Shoulder
Varies - 16' - 0" Min.
Note: 18' - 0" with 24" Lower Course Crushed Gravel Base
11' - 8"
5' - 1"
3/4" per ft.
1/4" per ft.
1/4" per ft.
Parabolic
Straight
Crown
Crown
3' - 4"
4:1
2:1
2:1
W/2
W
T
T
T
Where "X" Equals 10' or less
T equals X - 2, otherwise
T equals 7' - 6"
Where "X" equals 10' or less
T equals X - 2, otherwise
T equals 7' - 6"
4'
2'
2" Sod - 4" Loam
Sod Gutter
Where Req'd.
1'-0" Min.
See Sections
1'-0" Min.
See Sections
3" Loam, Seed & Hay Mulch
3" Loam, Seed & Hay Mulch
Subgrade Breakpoint
Subgrade Breakpoint
5" Bituminous Macadam Base
9" Crushed Gravel Base
18" Lower Course Crushed Gravel Base
24" Lower Course Crushed Gravel Base in Earth Cut (Where Indicated on Sections)
4:1 Slope to 10' Fill (Max.)
Existing Ground
LIMIT OF WORK STAGE CONSTRUCTION

TYPICAL SECTION - NORMAL

Scale: 1" = 5'

SOUTHBOUND INTERSTATE

10' PAVED SHOULDER	CY/100 L.F.
4" Bituminous Macadam Surface	12.19
Crushed Gravel Base (to 4:1 Slope)	36.33
18" Lower Course Crushed Gravel Base	91.92
24" Lower Course Crushed Gravel Base	130.64

24' PAVEMENT	CY/100 L.F.
3" Bituminous Concrete Surface	22.22
5" Bituminous Macadam Base (25' Wide)	38.58
9" Crushed Gravel Base	66.67
18" Lower Course Crushed Gravel Base	136.42
24" Lower Course Crushed Gravel Base	180.87

8' PAVED SHOULDER	CY/100 L.F.
4" Bituminous Macadam Surface	7.25
Crushed Gravel Base (to 4:1 Slope)	27.46
18" Lower Course Crushed Gravel Base	73.74
24" Lower Course Crushed Gravel Base	106.40

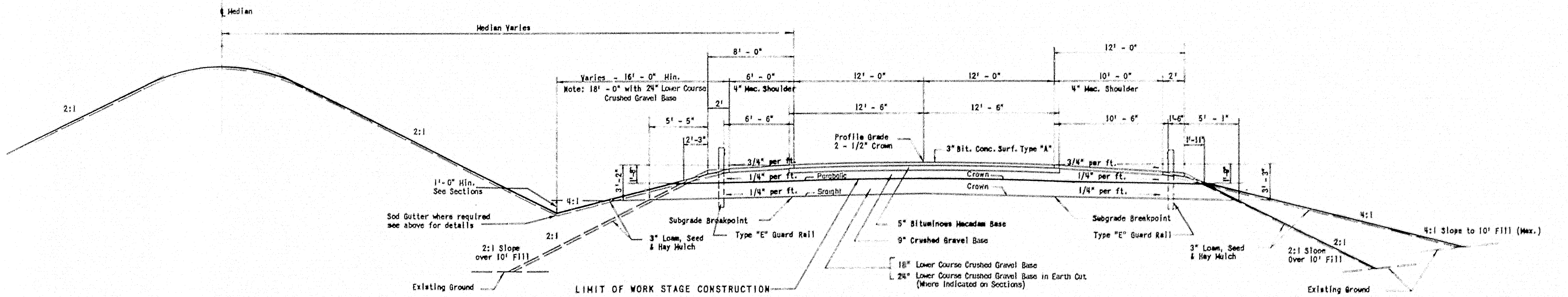
℄ Median
Median Varies
2:1
2:1
8' - 0"
Varies - 16' - 0" Min.
Note: 18' - 0" with 24" Lower Course Crushed Gravel Base
6' - 0"
4" Mac. Shoulder
2'
5' - 5"
6' - 6"
2'-3"
12' - 0"
12' - 0"
12' - 6"
12' - 6"
12' - 0"
10' - 0"
4" Mac. Shoulder
2'
10' - 6"
1'-6"
5' - 1"
1'-11"
Profile Grade
2 - 1/2" Crown
3" Bit. Conc. Surf. Type "A"
3/4" per ft.
1/4" per ft.
1/4" per ft.
Parabolic
Straight
Crown
Crown
3/4" per ft.
1/4" per ft.
1/4" per ft.
3'-2"
3'-3"
4:1
1'-0" Min.
See Sections
Sod Gutter where required
see above for details
2:1
2:1 Slope
over 10' Fill
Existing Ground
3" Loam, Seed & Hay Mulch
Subgrade Breakpoint
Type "E" Guard Rail
5" Bituminous Macadam Base
9" Crushed Gravel Base
18" Lower Course Crushed Gravel Base
24" Lower Course Crushed Gravel Base in Earth Cut (Where Indicated on Sections)
LIMIT OF WORK STAGE CONSTRUCTION
Subgrade Breakpoint
Type "E" Guard Rail
3" Loam, Seed & Hay Mulch
2:1 Slope
Over 10' Fill
4:1
4:1 Slope to 10' Fill (Max.)
2:1
Existing Ground

TYPICAL SECTION - NORMAL

Scale: 1" = 5'

NORTHBOUND INTERSTATE

8' PAVED SHOULDER	CY/100 L.F.
4" Bituminous Macadam Surface	9.72
Crushed Gravel Base (to 2:1 Slope)	29.23
18" Lower Course Crushed Gravel Base	62.80

12' PAVED SHOULDER	CY/100 L.F.
4" Bituminous Macadam Surface	14.66
Crushed Gravel Base (to 2:1 Slope)	38.14
18" Lower Course Crushed Gravel Base	83.09

MAINE STATE HIGHWAY COMMISSION
AUGUSTA, MAINE

TYPICAL SECTIONS

THE CLARKESON ENGINEERING CO., INC.
CONSULTING ENGINEERS
BOSTON MASSACHUSETTS

78-167

0 1 2 3 4 5 INCHES

B.P.R. REG. NO.	STATE	PROJECT NO.	SHEET NO.	TOTAL SHEETS
1	MAINE	I-95-6(23)	3	32

FINAL QUANTITIES

ITEM NO.	DESCRIPTION	QUANTITY	UNIT
201-5	Clearing	2.936	Acre
204-12	Structural Earth Excavation - Abutments & Retaining Walls	706	C.Y.
204-14	Structural Earth Excavation - Piers	6071	C.Y.
205-8	Common Borrow	6892	C.Y.
205-9	Granular Borrow	15251	C.Y.
302-7	Gravel Base Course - In Place Measurement	1896	C.Y.
306-5	Overhaul - In Place Measure	5006	Yd. Mi.
306-6	Overhaul - Pit Measure	19756	Yd. Mi.
[illegible]	Stripping Pits	NONE	C.Y.
701-33	Portland Cement Concrete - Abutments & Retaining Walls	528.44	C.Y.
701-35	Portland Cement Concrete - Piers	1,134.31	C.Y.
[illegible]	Portland Cement Concrete - Roadway & Sidewalk Slabs on Steel Bridges	2162.53	C.Y.
[illegible]	Portland Cement	10,255	Bbls.
[illegible]	Structural Steel - Fabricated & Delivered	3,413,214	Lbs.
[illegible]	Structural Steel- Erection	3,413,214	Lbs.
[illegible]	Bronze or Copper - Alloy Bearing & Expansion Plates - Delivered	4392	Lbs.
[illegible]	Bronze or Copper - Alloy Bearing & Expansion Plates - Placing	4392	Lbs.
[illegible]	Reinforcing Steel - Delivered	1,192,685	Lbs.
[illegible]	Reinforcing Steel - Placing	1,192,685	Lbs.
[illegible]	Steel H-Beam Piles 42 Lbs./Foot	18,125.7	L.F.
[illegible]	Steel H-Beam Piles 53 Lbs./Foot	31,953.0	L.F.
[illegible]	Steel H-Beam Piles 73 Lbs./Foot	8,907.5	L.F.
[illegible]	Steel H-Beam Piles 89 Lbs./Foot	6,483.2	L.F.
[illegible]	Bridge Drainage	1	L.S.
[illegible]	Shear Connectors - Delivered & Placed	1	L.S.
804-6	French Drains	222	C.Y.
807-15	Aluminum Railing	4,190.1	L.F.
906-18	Fencing - Metal Posts	1028	L.F.
907-9	Plain Riprap	1276.0	C.Y.
907-10	Hand Laid Riprap	1,555.6	C.Y.
908-9	Loam Borrow	3741	C.Y.
910-10	Seeding - Parkway Mixture	314.3	Units
912-6	Hay Mulch	19.28	Ton
914-6	Project Markers	NONE	Each
915-6	Right of Way Monuments	6	Each
[illegible]	SODDING EWO [illegible]	1506	S.Y.
[illegible]	TREMIE SEAL PIER [illegible]	500	C.Y.
[illegible]	SPECIAL BACKFILL	1471	C.Y.
[illegible]	TREMIE SEAL PIER [illegible]	518	C.Y.
[illegible]	WELLPOINTS PIER [illegible]	30,373.75	L.S.
[illegible]	SILICONE TREATMENT OF [illegible] & CURBS	1,964	S.Y.
[illegible]	5" [illegible] - GUTTER	31.1	S.Y.
[illegible]	SHEETING, PIER "A"	23,281.01	L.S.
[illegible]	PILE DRIVING AT [illegible] ABUT	5,856.09	L.S.
[illegible]	WELLPOINTS AT PIER "B"	15,269.99	L.S.

CLEARING

STATION TO STATION	SIDE	REMARKS
Northbound		
1050 + 15 to 1052 + 10	Lt.	
1050 + 80 to 1052 + 30	Rt.	
Southbound		
1051 + 50 to 1054 + 00	Lt.	
1052 + 00 to 1053 + 95	Rt.	

RIGHT-OF-WAY MONUMENTS

STATION	LEFT	RIGHT	NO.	REMARKS
Northbound				
1051 + 50		100.00'	1	
1053 + 50		100.00'	1	
1058+40		225'	1	
Southbound				
1052 + 00	100.00'		1	
1055 + 25	100.00'		1	
1018 + 50	150.00'		1	RESET

FENCING - METAL POSTS

STATION TO STATION	SIDE	LENGTH	REMARKS
Northbound			
1047 + 50 To 1049 + 36	Rt.	186	
Southbound			
1048 + 40 To 1049 + 10	Lt.	70	
Northbound 1057+50 ±	Rt.		
to Southbound 1057+0 ±	Lt.	772	

GRAVEL BASE COURSE

STATION TO STATION	DESCRIPTION
Northbound	
1046 + 25 to 1047 + 56	18" Crushed Gravel
1057 + 80 to 1059 + 50	"
Southbound	
1047 + 25 to 1048 + 66	"
1058 + 90 to 1060 + 50	"

SUMMARY OF CLASSIFIED EXCAVATION AND BORROW

Total Earth Embankment from Cross Sections	9,537 C.Y.
20% Granular Borrow	1,907 C.Y.
Common Borrow	7,630 C.Y.
Total Common Borrow 7630 + 70*	7,700 C.Y.
Total Granular Borrow 1907 + 03*	1,900 C.Y.

* Undetermined Origin

K+E PHOENIX BLUE 784

78-168

0 1 2 3 4 5 INCHES

B.P.R. REG NO.	STATE	PROJECT NO.	SHEET NO.	TOTAL SHEETS
1	MAINE	I-95-6 (23)	4	32

WATERVILLE INTERSTATE

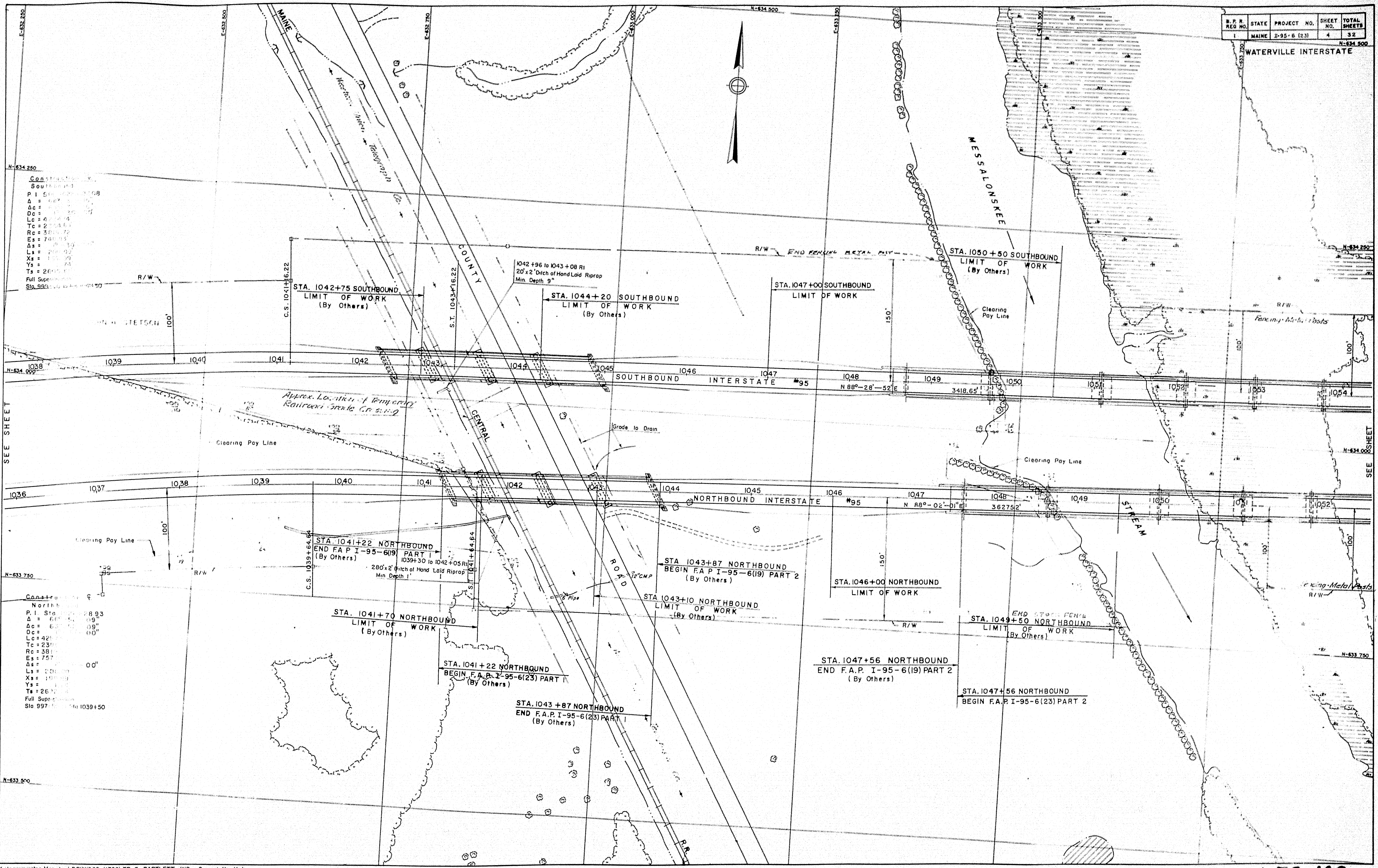

N-634 500
E-632 250
E-632 500
E-632 750
E-633 000
E-633 250
N-634 250
N-634 000
N-633 750
N-633 500
MAINE
Western Union Telegraph
COUNTY
CENTRAL
ROAD
R.R.
MESSALONSKEE
STREAM
Construction ℄
Southbound
P. I. Sta. ...08
Δ =
Δc =
Dc =
Lc = 4...
Tc = 2...
Rc = 3...72
Es = 7...
Δs =
Ls =
Xs =
Ys =
Ts = 2...
Full Super...
Sta. 99... to ... 1041+50
Construction ℄
Northbound
P. I. Sta. ...28.93
Δ = 66° ... 09"
Δc = 63° ... 09"
Dc = ... 00"
Lc = 42...
Tc = 23...
Rc = 38...
Es = 757...
Δs = ... 00"
Ls = 250...
Xs = 1...
Ys =
Ts = 26...
Full Superelevation
Sta. 997+... to Sta. 1039+50
R/W
STETSON
100'
C.S. 1041+16.22
S.T. 1043+16.22
STA. 1042+75 SOUTHBOUND
LIMIT OF WORK
(By Others)
1042+96 to 1043+08 Rt
20'x2' Ditch of Hand Laid Riprap
Min. Depth 9"
STA. 1044+20 SOUTHBOUND
LIMIT OF WORK
(By Others)
R/W — END FENCING METAL POST
STA. 1047+00 SOUTHBOUND
LIMIT OF WORK
STA. 1050+50 SOUTHBOUND
LIMIT OF WORK
(By Others)
150'
Clearing Pay Line
R/W
Fencing-Metal Posts
1038
1039
1040
1041
1042
1043
1044
1045
1046
1047
1048
1049
1050
1051
1052
1053
1054
SOUTHBOUND INTERSTATE #95
N 88°-28'-52" E
3418.65'
Approx. Location of Temporary Railroad Grade Crossing
Clearing Pay Line
Grade to Drain
SEE SHEET
1036
1037
NORTHBOUND INTERSTATE #95
N 88°-02'-01" E
3627.52'
Clearing Pay Line
100'
R/W
C.S. 1039+64.64
S.T. 1041+64.64
STA. 1041+22 NORTHBOUND
END F.A.P. I-95-6(19) PART I
(By Others)
1039+30 to 1042+05 Rt
280'x2' Ditch of Hand Laid Riprap
Min Depth 1'
6" Pipe
18" CMP
STA. 1041+70 NORTHBOUND
LIMIT OF WORK
(By Others)
STA. 1041+22 NORTHBOUND
BEGIN F.A.P. I-95-6(23) PART I
(By Others)
STA. 1043+87 NORTHBOUND
BEGIN F.A.P. I-95-6(19) PART 2
(By Others)
STA. 1043+10 NORTHBOUND
LIMIT OF WORK
(By Others)
STA. 1043+87 NORTHBOUND
END F.A.P. I-95-6(23) PART I
(By Others)
STA. 1046+00 NORTHBOUND
LIMIT OF WORK
150'
R/W
END STOCK FENCE
STA. 1049+50 NORTHBOUND
LIMIT OF WORK
(By Others)
Fencing-Metal Posts
R/W
STA. 1047+56 NORTHBOUND
END F.A.P. I-95-6(19) PART 2
(By Others)
STA. 1047+56 NORTHBOUND
BEGIN F.A.P. I-95-6(23) PART 2

Photogrammetric Map by LOCKWOOD, KESSLER & BARTLETT, INC. Syosset, New York
Date of Photography 11-11-57

78-169

0 1 2 3 4 5 INCHES

B.P.R. REG. NO.	STATE	PROJECT NO.	SHEET NO.	TOTAL SHEETS
1	MAINE	I - 95-6(23)	5	32

WATERVILLE INTERSTATE

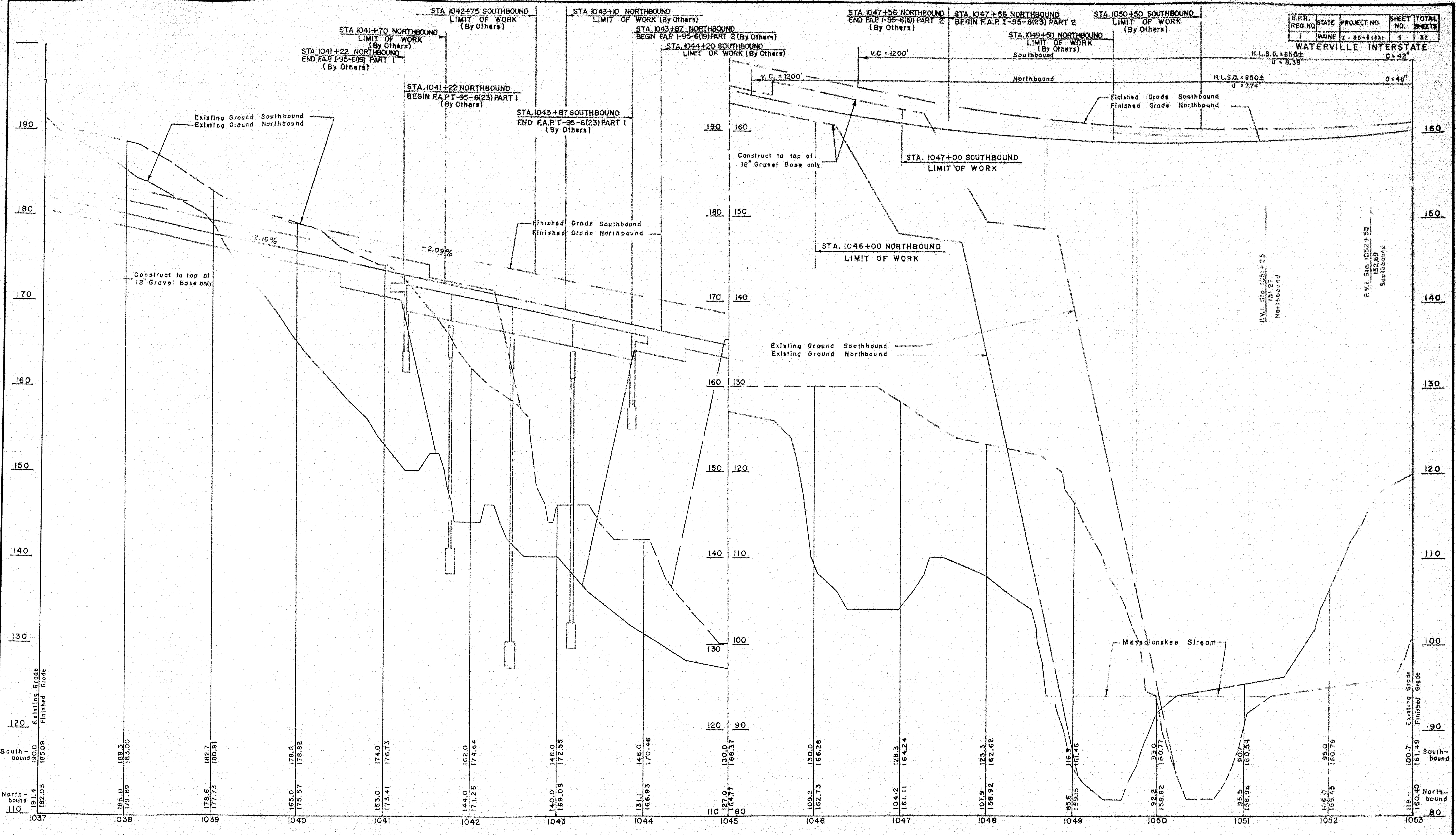
STA 1042+75 SOUTHBOUND
LIMIT OF WORK
(By Others)
STA 1043+10 NORTHBOUND
LIMIT OF WORK (By Others)
STA 1041+70 NORTHBOUND
LIMIT OF WORK
(By Others)
STA. 1043+87 NORTHBOUND
BEGIN F.A.P. I-95-6(19) PART 2 (By Others)
STA. 1044+20 SOUTHBOUND
LIMIT OF WORK (By Others)
STA 1041+22 NORTHBOUND
END F.A.P. I-95-6(19) PART I
(By Others)
STA. 1041+22 NORTHBOUND
BEGIN F.A.P I-95-6(23) PART I
(By Others)
STA. 1043+87 SOUTHBOUND
END F.A.P. I-95-6(23) PART I
(By Others)
STA. 1047+56 NORTHBOUND
END F.A.P. I-95-6(19) PART 2
(By Others)
STA. 1047+56 NORTHBOUND
BEGIN F.A.P. I-95-6(23) PART 2
STA. 1050+50 SOUTHBOUND
LIMIT OF WORK
(By Others)
STA. 1049+50 NORTHBOUND
LIMIT OF WORK
(By Others)
V.C. = 1200'
Southbound
H.L.S.D. = 850±
d = 8.38'
C = 42"
V.C. = 1200'
Northbound
H.L.S.D. = 950±
d = 7.74'
C = 46"
Finished Grade Southbound
Finished Grade Northbound
Existing Ground Southbound
Existing Ground Northbound
Construct to top of 18" Gravel Base only
2.16%
-2.09%
Finished Grade Southbound
Finished Grade Northbound
Construct to top of 18" Gravel Base only
STA. 1047+00 SOUTHBOUND
LIMIT OF WORK
STA. 1046+00 NORTHBOUND
LIMIT OF WORK
Existing Ground Southbound
Existing Ground Northbound
P.V.I. Sta. 1051+25
151.27
Northbound
P.V.I. Sta. 1052+50
152.69
Southbound
Messalonskee Stream
190
180
170
160
150
140
130
120
110
190 160
180 150
170 140
160 130
150 120
140 110
130 100
120 90
110 80
160
150
140
130
120
110
100
90
80
Existing Grade
Finished Grade
South-bound
North-bound
190.0 185.09
191.4 182.05
188.3 183.00
185.0 179.89
182.7 180.91
178.6 177.73
178.8 178.82
165.0 175.57
174.0 176.73
153.0 173.41
162.0 174.64
144.0 171.25
146.0 172.55
140.0 169.09
146.0 170.46
131.1 166.93
130.0 168.37
127.0 164.77
130.0 166.28
109.2 162.73
128.3 164.24
104.2 161.11
123.3 162.62
107.9 159.92
116.9 161.46
85.6 159.15
93.0 160.77
92.2 158.82
90.7 160.54
95.5 158.96
95.0 160.79
106.0 159.45
100.7 161.49
119.± 160.40
1037
1038
1039
1040
1041
1042
1043
1044
1045
1046
1047
1048
1049
1050
1051
1052
1053

INTERSTATE #95 (WATERVILLE INTERSTATE)

78-170

0 1 2 3 4 5 INCHES

B P R REG NO	STATE	PROJECT NO	SHEET NO	TOTAL SHEETS
1	MAINE	I-95-6(23)	6	32

WATERVILLE INTERSTATE

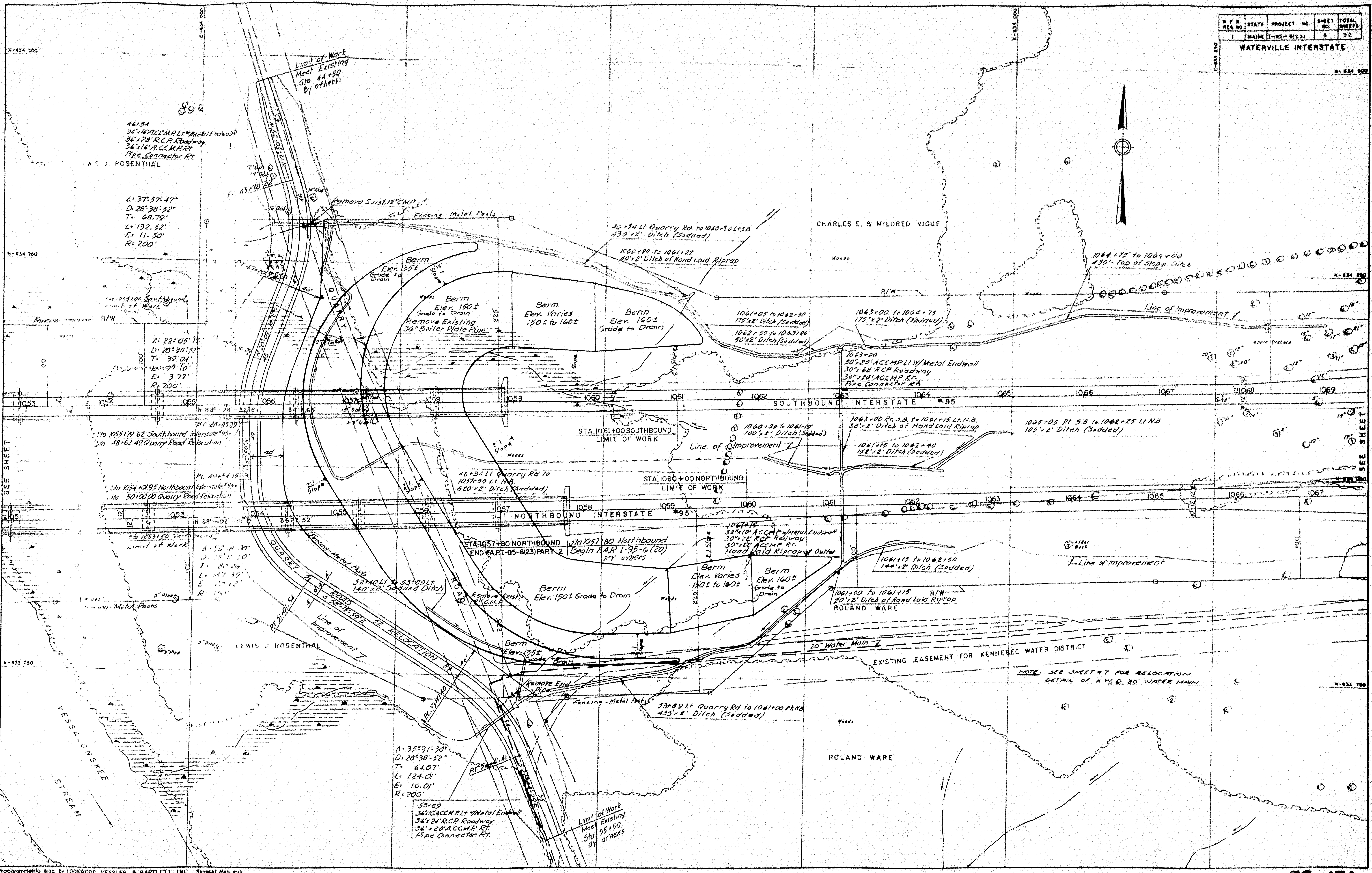
E-634 000
E-635 000
E-635 250
N-634 500
N-634 250
N-634 900
N-633 750
N-633 780
Limit of Work
Meet Existing
Sta 44+50
By others
46+34
36"x16' A.C.C.M.P. Lt w/Metal Endwall
36"x28' R.C.P. Roadway
36"x16' A.C.C.M.P. Rt
Pipe Connector Rt
ROSENTHAL
Δ: 37°-57'-47"
D: 28°-38'-52"
T: 68.79'
L: 132.52'
E: 11.50'
R: 200'
12" Oak
14" Oak
16" Oak
PC 45+78.22
PT 47+10.
Remove Exist. 12" CMP
Fencing Metal Posts
46+34 Lt Quarry Rd to 1060+90 Lt SB
430'x2' Ditch (Sodded)
1060+90 to 1061+22
40'x2' Ditch of Hand Laid Riprap
CHARLES E. & MILDRED VIGUE
Woods
R/W
Berm
Elev. 135±
Grade to Drain
Berm
Elev. 150±
Grade to Drain
Remove Existing
36" Boiler Plate Pipe
Berm
Elev. Varies
150± to 160±
Berm
Elev. 160±
Grade to Drain
2:1 Slope
225'
QUARRY
1055+00 Southbound
Limit of Work
Fencing
R/W
Δ: 22°-05'-15"
D: 28°-38'-52"
T: 39.04'
L: 77.10'
E: 3.77'
R: 200'
100'
1061+05 to 1062+50
175'x2' Ditch (Sodded)
1062+50 to 1063+00
50'x2' Ditch (Sodded)
1063+00 to 1064+75
175'x2' Ditch (Sodded)
1064+75 to 1069+00
430'-Top of Slope Ditch
Line of Improvement
Apple Orchard
1063+00
30"x20' ACCMP Lt W/Metal Endwall
30"x68 RCP Roadway
30"x20' ACCMP Rt.
Pipe Connector Rt.
1053
1054
1055
1056
1057
1058
1059
1060
1061
1062
1063
1064
1065
1066
1067
1068
1069
N 88° 28' 52" E
341.65'
SOUTHBOUND INTERSTATE #95
PT 48+83.39
Sta 1055+79.62 Southbound Interstate #95
Sta 48+62.49 Quarry Road Relocation
STA. 1061+00 SOUTHBOUND
LIMIT OF WORK
1060+20 to 1061+15
100'x2' Ditch (Sodded)
Line of Improvement
1063+00 Rt. S.B. to 1061+15 Lt. N.B.
38'x2' Ditch of Hand Laid Riprap
1061+15 to 1062+40
152'x2' Ditch (Sodded)
1065+05 Rt. S.B. to 1062+25 Lt N.B
105'x2' Ditch (Sodded)
SEE SHEET
SEE SHEET
40'
PC 49+54.15
Sta 1054+01.95 Northbound Interstate #95
Sta 50+00.00 Quarry Road Relocation
46+34 Lt Quarry Rd to
1057+55 Lt. N.B.
620'x2' Ditch (Sodded)
STA. 1060+00 NORTHBOUND
LIMIT OF WORK
12'
N 88° 02' E
362.52'
NORTHBOUND INTERSTATE #95
Sta 1053+50 Southbound
Limit of Work
STA. 1057+80 NORTHBOUND
END F.A.P. I-95-6(23) PART 2
Sta 1057+80 Northbound
Begin F.A.P. I-95-6(20)
BY OTHERS
1061+15
30"x10' ACCMP w/Metal Endwall
30"x72' RCP Roadway
30"x22' ACCMP Rt.
Hand Laid Riprap at Outlet
1061+15 to 1062+50
144'x2' Ditch (Sodded)
Alder Bush
Line of Improvement
1061+00 to 1061+15
20'x2' Ditch of Hand Laid Riprap
ROLAND WARE
QUARRY ROAD RELOCATION
Fencing-Metal Posts
52+10 Lt. to 53+89 Lt.
140'x2' Sodded Ditch
Remove Exist. 12" C.M.P.
Berm
Elev. 150± Grade to Drain
Woods
5" Pine
Metal Posts
PT 51+01.54
Line of Improvement
LEWIS J. ROSENTHAL
PC 53+77.40
Berm
Elev. 135±
Grade to Drain
20" Water Main
EXISTING EASEMENT FOR KENNEBEC WATER DISTRICT
NOTE. SEE SHEET #7 FOR RELOCATION
DETAIL OF K.W.D. 20" WATER MAIN
Remove Exist. Pipe
Fencing-Metal Posts
53+89 Lt Quarry Rd to 1061+00 Rt. NB
435'x2' Ditch (Sodded)
MESSALONSKEE STREAM
Δ: 35°-31'-30"
D: 28°-38'-52"
T: 64.07'
L: 124.01'
E: 10.01'
R: 200'
PT 54+01.41
53+09
36"x10' A.C.C.M.P. Lt w/Metal Endwall
36"x24' R.C.P. Roadway
36"x20' A.C.C.M.P. Rt.
Pipe Connector Rt.
Limit of Work
Meet Existing
Sta 55+50
BY OTHERS
ROLAND WARE
Woods

Photogrammetric Map by LOCKWOOD, KESSLER & BARTLETT, INC. Syosset, New York
Date of Photography 11-11-57

78-171

B.P.R. REG. NO.	STATE	PROJECT NO.	SHEET NO.	TOTAL SHEETS
1	MAINE	I-95-6(23)	7	32

WATERVILLE INTERSTATE

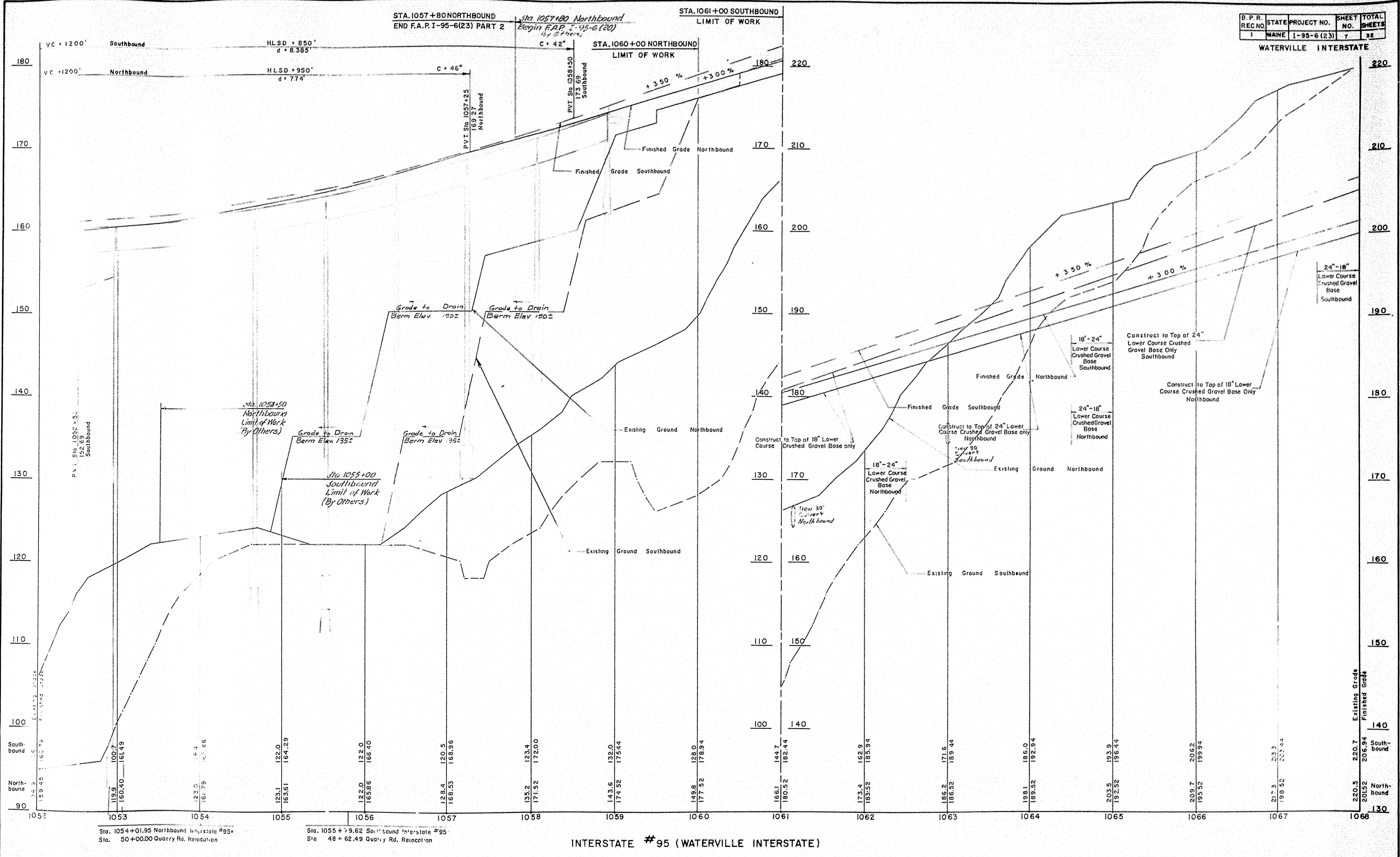

STA. 1057+80 NORTHBOUND
END F.A.P. I-95-6(23) PART 2
Sta. 1057+80 Northbound
Begin F.A.P. I-95-6(20)
By Others
STA. 1061+00 SOUTHBOUND
LIMIT OF WORK
STA. 1060+00 NORTHBOUND
LIMIT OF WORK
VC = 1200' Southbound
HLSD = 850'
d = 8.385'
C = 42"
VC = 1200' Northbound
HLSD = 950'
d = 7.74'
C = 46"
PVT. Sta. 1057+25
169.27
Northbound
PVT. Sta. 1058+50
173.69
Southbound
+3.50 %
+3.00 %
Finished Grade Northbound
Finished Grade Southbound
Grade to Drain
Berm Elev. 150±
Grade to Drain
Berm Elev. 150±
Grade to Drain
Berm Elev. 135±
Grade to Drain
Berm Elev. 135±
Sta. 1053+50
Northbound
Limit of Work
(By Others)
Sta. 1055+00
Southbound
Limit of Work
(By Others)
PVT. Sta. 1052+53
152.69
Southbound
Existing Ground Northbound
Existing Ground Southbound
Construct to Top of 18" Lower Course Crushed Gravel Base only
New 30" Culvert Northbound
18"-24" Lower Course Crushed Gravel Base Northbound
Finished Grade Southbound
Construct to Top of 24" Lower Course Crushed Gravel Base only Northbound
New 30" Culvert Southbound
Existing Ground Northbound
Existing Ground Southbound
Finished Grade Northbound
18"-24" Lower Course Crushed Gravel Base Southbound
24"-18" Lower Course Crushed Gravel Base Northbound
Construct to Top of 24" Lower Course Crushed Gravel Base Only Southbound
Construct to Top of 18" Lower Course Crushed Gravel Base Only Northbound
24"-18" Lower Course Crushed Gravel Base Southbound
180
170
160
150
140
130
120
110
100
90
220
210
200
190
180
170
160
150
140
130
Existing Grade
Finished Grade
Southbound
Northbound
100.7 161.49
119.9 160.40
123.0 161.79
122.0 164.29
123.1 163.61
122.0 166.40
122.0 165.86
120.5 168.96
128.4 168.53
123.4 172.00
135.2 171.52
132.0 175.44
143.6 174.52
128.0 178.94
149.8 177.52
144.7 182.44
166.1 180.52
162.9 185.94
173.4 183.52
171.6 189.44
186.2 186.52
186.0 192.94
198.1 189.52
193.9 196.44
203.5 192.52
206.2 199.94
209.7 195.52
217.3 198.52
220.7 206.94
220.5 201.52
1052
1053
1054
1055
1056
1057
1058
1059
1060
1061
1062
1063
1064
1065
1066
1067
1068
Sta. 1054+01.95 Northbound Interstate #95
Sta. 50+00.00 Quarry Rd. Relocation
Sta. 1055+79.62 Southbound Interstate #95
Sta. 48+62.49 Quarry Rd. Relocation

INTERSTATE #95 (WATERVILLE INTERSTATE)

78-172

0 1 2 3 4 5 INCHES

B.P.R. REG. NO.	STATE	PROJECT NO.	SHEET NO.	TOTAL SHEETS
1	MAINE	I-95-6(23)	8	32

WATERVILLE INTERSTATE

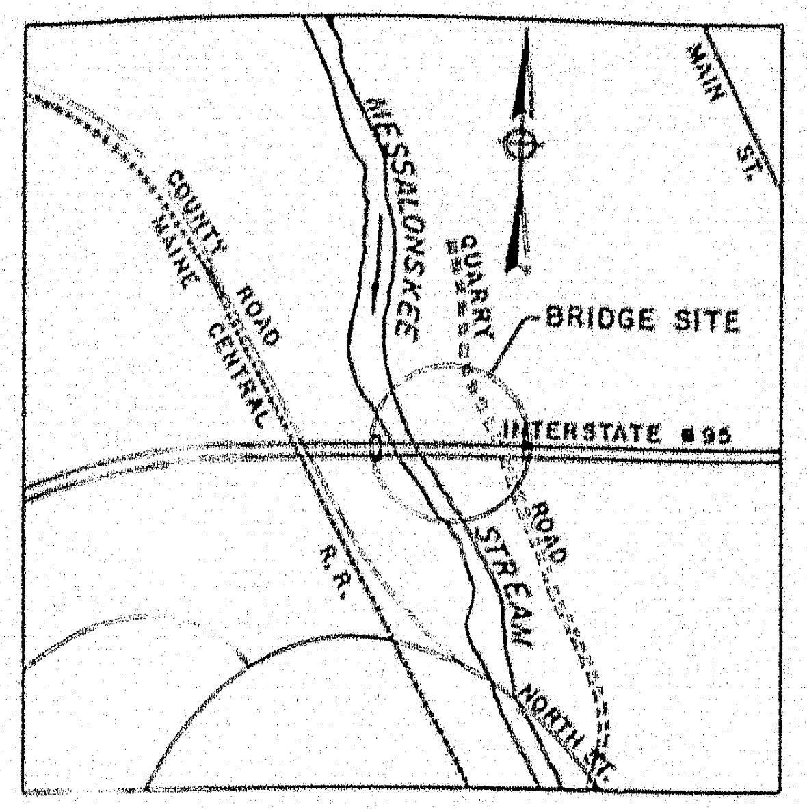
MAIN ST.
MESSALONSKEE
COUNTY ROAD
MAINE CENTRAL R.R.
QUARRY ROAD
BRIDGE SITE
INTERSTATE #95
STREAM
ROAD
NORTH ST.

LOCATION MAP

NOT TO SCALE

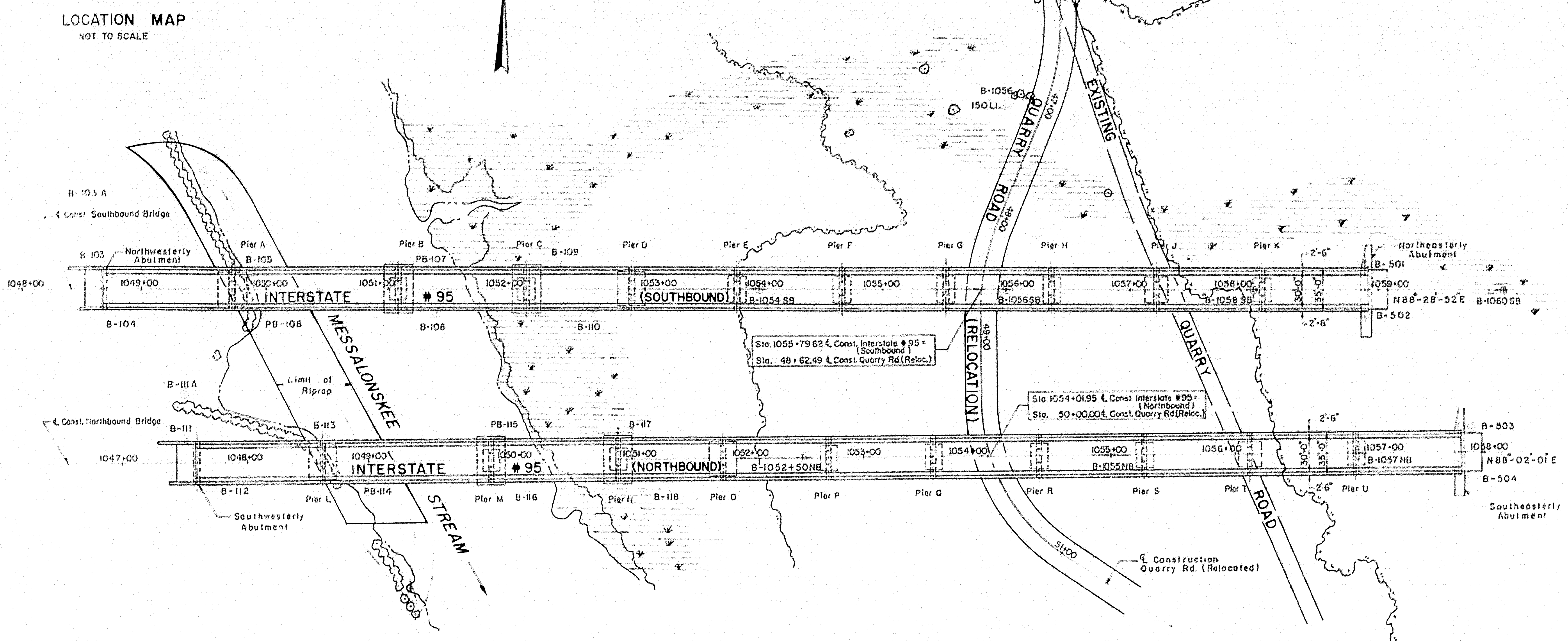
B-103 A
℄ Const. Southbound Bridge
B-103
Northwesterly Abutment
B-105
Pier A
Pier B
PB-107
Pier C
B-109
Pier D
Pier E
Pier F
Pier G
Pier H
Pier J
Pier K
2'-6"
Northeasterly Abutment
B-501
1048+00
1049+00
1050+00
INTERSTATE
1051+00
#95
1052+00
1053+00
(SOUTHBOUND)
1054+00
B-1054 SB
1055+00
1056+00
B-1056SB
1057+00
1058+00
B-1058 SB
30'-0"
35'-0"
1059+00
N88°-28'-52"E
B-1060SB
B-502
B-104
PB-106
MESSALONSKEE
B-108
B-110
Sta. 1055+79.62 ℄ Const. Interstate #95 (Southbound)
Sta. 48+62.49 ℄ Const. Quarry Rd. (Reloc.)
B-1056
150 Lt.
QUARRY
ROAD
EXISTING
QUARRY
ROAD
(RELOCATION)
46+00
47+00
48+00
49+00
B-111 A
Limit of Riprap
℄ Const. Northbound Bridge
B-111
B-113
PB-115
B-117
Sta. 1054+01.95 ℄ Const. Interstate #95 (Northbound)
Sta. 50+00.00 ℄ Const. Quarry Rd. (Reloc.)
2'-6"
B-503
1047+00
1048+00
1049+00
INTERSTATE
1050+00
#95
1051+00
(NORTHBOUND)
1052+00
B-1052+50NB
1053+00
1054+00
1055+00
B-1055NB
1056+00
30'-0"
35'-0"
1057+00
B-1057 NB
1058+00
N88°-02'-01"E
B-504
B-112
Pier L
PB-114
Pier M
B-116
Pier N
B-118
Pier O
Pier P
Pier Q
Pier R
Pier S
Pier T
2'-6"
Pier U
Southwesterly Abutment
STREAM
Southeasterly Abutment
51+00
℄ Construction Quarry Rd. (Relocated)

KEY PLAN

Scale 1" = 50'-0"

B-1055
150' Rt

Note 3-ply Membrane Waterproofing and Bituminous Concrete Surfacing are not in this contract

GENERAL NOTES

FOUNDATION:

Foundations may be altered, if necessary, to suit conditions encountered in construction.

DESIGN:

In accordance with the Specifications of the American Association of State Highway Officials for H20-S16-44 loading (1957 Edition) and as modified for military requirements.

Design Stresses		
	Structural Steel	fs = 18,000 psi
	Reinforcing Steel	fs = 18,000 psi
	Concrete (n = 10)	fc = 1,200 psi

CONSTRUCTION:

State of Maine Standard Specifications to be followed except as noted in Special Provisions.

STRUCTURAL STEEL:

Wherever cover plates and/or shear connectors are welded to beams, beams and plates shall be Weldable Structural Steel A.S.T.M. Designation A373

HYDRAULIC DATA:

Drainage Area	200 sq mi
Design Flood	1936
Estimated Discharge	9000 cfs
Velocity of Flow	6'/sec

BENCH MARK:

BM-47 A	Hinge nail (horiz.) in side of 5", one of cluster of 10 Ash trees (along river bank) Sta 1049+50 (N.B.)-130' Rt. Elevation 102.06 U.S.G.S. Datum
BM-47 B	Hinge nail in root of 4" White Birch. Sta 1052+53 (S.B.)-120' Lt. Elevation 98.02 U.S.G.S. Datum.
BM-6	Spike & washer in N.E. root of 6" White Birch on north edge of Quarry Rd Sta 1057+30 (N.B.) 210' Rt Elevation 121.91 U.S.G.S. Datum.

DESIGN	CHECK H.	BRIDGE NO. SURVEY PLAN
DRAWN E. K.	APPROVED W.A.H.-J.M.	

STATE HIGHWAY COMMISSION
INTERSTATE #95
OVER
MESSALONSKEE STREAM
& QUARRY ROAD (RELOC.)
IN THE CITY OF
WATERVILLE
KENNEBEC COUNTY
KEY PLAN

SHEET 1 OF 23 SHEETS AUGUSTA, MAINE

APPROVED BY Wm. A. Henderson DATE 2-17-59

THE CLARKESON ENGINEERING CO., INC.
CONSULTING ENGINEERS
BOSTON MASSACHUSETTS

78-173

0 1 2 3 4 5 INCHES

B.P.R. REG. NO.	STATE	PROJECT NO.	SHEET NO.	TOTAL SHEETS
1	MAINE	I-95-6(23)	9	32

WATERVILLE INTERSTATE

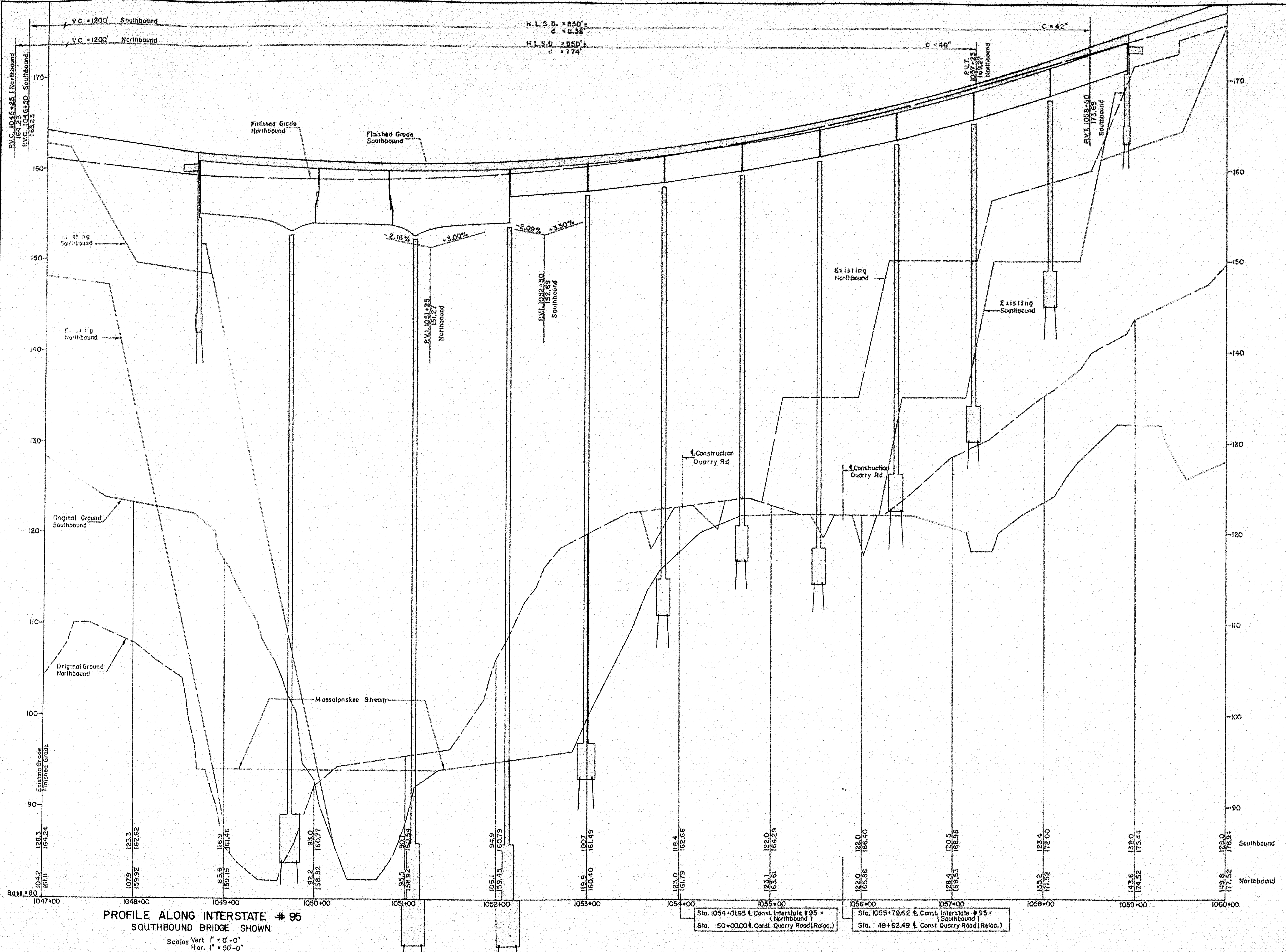
V.C. = 1200' Southbound
V.C. = 1200' Northbound
H.L.S.D. = 850'± d = 8.38'
H.L.S.D. = 950'± d = 7.74'
C = 42"
C = 46"
P.V.C. 1045+25 Northbound 164.23
P.V.C. 1046+50 Southbound 165.23
P.V.T. 1057+25 169.27 Northbound
P.V.T. 1058+50 173.69 Southbound
P.V.I. 1051+25 151.27 Northbound
P.V.I. 1052+50 152.69 Southbound
Finished Grade Northbound
Finished Grade Southbound
Existing Southbound
Existing Northbound
Original Ground Southbound
Original Ground Northbound
Messalonskee Stream
℄ Construction Quarry Rd
−2.16%
+3.00%
−2.09%
+3.50%
170
160
150
140
130
120
110
100
90
Base = 80
Existing Grade
Finished Grade
128.3 164.24
104.2 161.11
123.3 162.62
107.9 159.92
116.9 161.46
85.6 159.15
93.0 160.77
92.2 158.82
90.7 160.54
95.5 158.92
94.9 160.79
106.1 159.45
100.7 161.49
119.9 160.40
118.4 162.66
123.0 161.79
122.0 164.29
123.1 163.61
122.0 166.40
122.0 165.86
120.5 168.96
128.4 168.53
123.4 172.00
135.2 171.52
132.0 175.44
143.6 174.52
128.0 178.94
149.8 177.52
Southbound
Northbound
1047+00
1048+00
1049+00
1050+00
1051+00
1052+00
1053+00
1054+00
1055+00
1056+00
1057+00
1058+00
1059+00
1060+00

Sta. 1054+01.95 ℄ Const. Interstate #95 = (Northbound)
Sta. 50+00.00 ℄ Const. Quarry Road (Reloc.)

Sta. 1055+79.62 ℄ Const. Interstate #95 = (Southbound)
Sta. 48+62.49 ℄ Const. Quarry Road (Reloc.)

PROFILE ALONG INTERSTATE # 95

SOUTHBOUND BRIDGE SHOWN

Scales Vert. 1" = 5'-0"
Hor. 1" = 50'-0"

THE CLARKESON ENGI CO., INC.

DESIGN	CHECK H.P.	
DRAWN E.K.	APPROVED W.A.H.-C.J.M.	

STATE HIGHWAY CO SSION

INTERSTATE #95
OVER
MESSALONSKEE STREAM & QUARRY ROAD (RELOC.)
IN THE CITY OF
WATERVILLE
KENNEBEC COUNTY

PROFILE

SHEET 2 OF 23 SHEETS

AUGUSTA, MAINE

78-174

0 1 2 3 4 5 INCHES

B.P.R. REG. NO.	STATE	PROJECT NO.	SHEET NO.	TOTAL SHEETS
1	MAINE	I-95-6(23)	10	32

WATERVILLE INTERSTATE

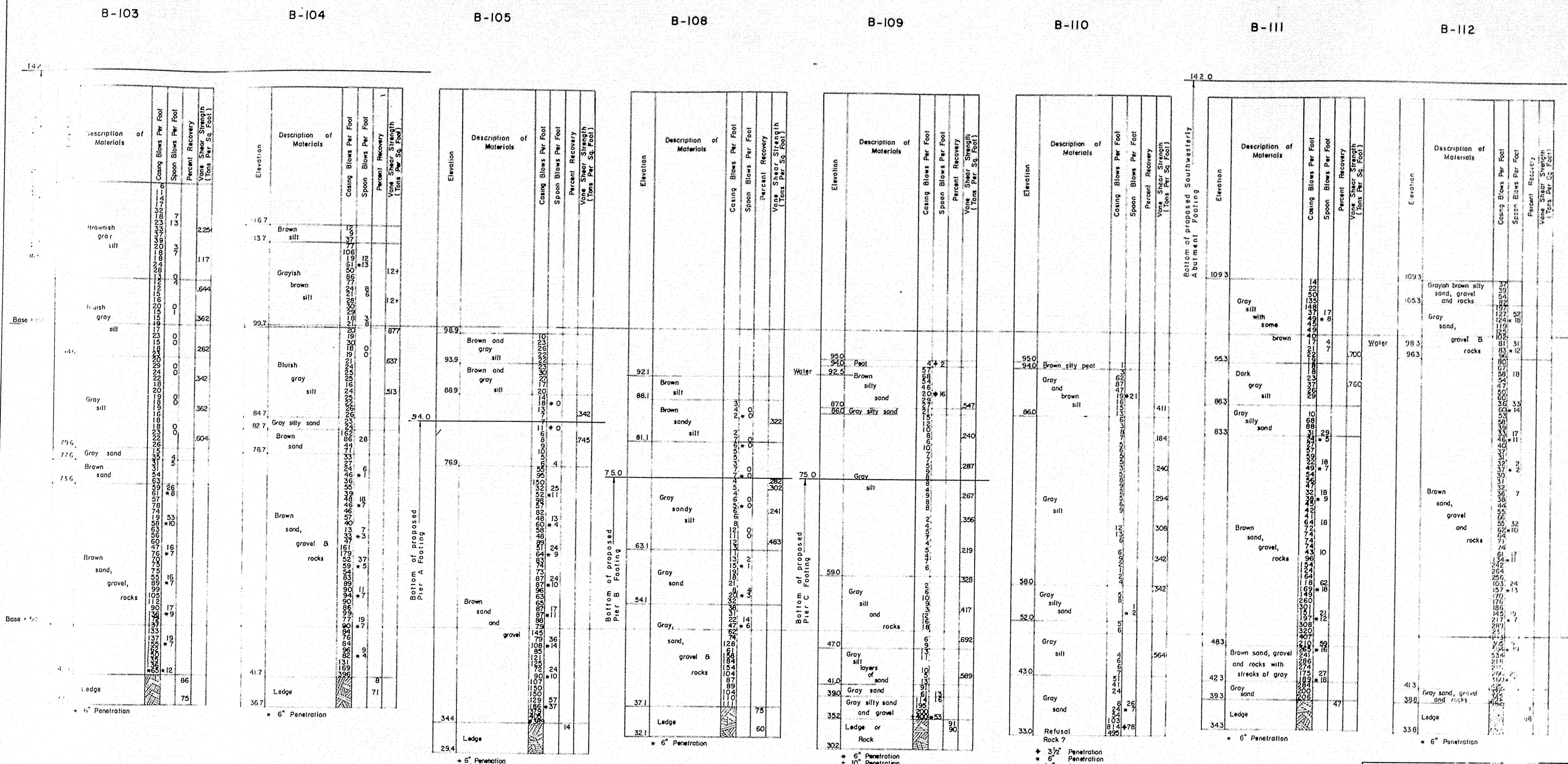

B-103
B-104
B-105
B-108
B-109
B-110
B-111
B-112
Elevation
Description of Materials
Casing Blows Per Foot
Spoon Blows Per Foot
Percent Recovery
Vane Shear Strength (Tons Per Sq. Foot)
Brownish gray silt
Bluish gray silt
Gray silt
Gray sand
Brown sand
Brown sand, gravel, rocks
Ledge
Brown silt
Grayish brown silt
Bluish gray silt
Gray silty sand
Brown sand
Brown sand, gravel & rocks
Brown and gray silt
Brown and gray silt
Brown sand and gravel
Brown silt
Brown sandy silt
Gray sandy silt
Gray sand
Gray, sand, gravel & rocks
Peat
Brown silty sand
Gray silty sand
Gray silt
Gray silt and rocks
Gray silt layers of sand
Gray sand
Gray silty sand and gravel
Ledge or Rock
Brown silty peat
Gray and brown silt
Gray silt
Gray silty sand
Gray silt
Gray sand
Refusal Rock ?
Gray silt with some brown
Dark gray silt
Gray silty sand
Brown sand, gravel, rocks
Brown sand, gravel and rocks with streaks of gray
Gray sand
Grayish brown silty sand, gravel and rocks
Gray sand, gravel & rocks
Brown sand, gravel and rocks
Gray sand, gravel and rocks
Water
142.0
94.0
75.0
Bottom of proposed Pier A Footing
Bottom of proposed Pier B Footing
Bottom of proposed Pier C Footing
Bottom of proposed Southwesterly Abutment Footing
Base
* 6" Penetration
* 6" Penetration
+ 18" Penetration
* 6" Penetration
+ 10" Penetration
+ 18" Penetration
* 24" Penetration
+ 3½" Penetration
* 6" Penetration
* 24" Penetration

BORING LOG

Scale: 1/8" = 1'-0"

Notes:

1. Location of borings are shown on Key Plan thus ◉ B-103.
   Location of punchings are show on Key Plan thus ◉ PB-106
2. Borings are taken for purpose of design and show condition at boring points only, but do not necessarily show nature of materials to be encountered during construction.
3. Figures in boring columns indicate blows per foot on 2½" or 4" casing, sample tube, or 1⅝" spoon produced by a 310 # hammer with a fall of 16", 18" and 14" respectively.
4. Punchings made by a 1" rod and a 60 # hammer with an 18" drop.
5. Borings & Punchings were taken by the Maine State Highway Commision during the months of May, June, July and August 1958.

THE CLARKESON ENGINEERING CO., INC.

DESIGN	CHECK S.B.	BRIDGE NO.
DRAWN E.K.	APPROVED W.A.H. C.J.M.	SURVEY PLOT

STATE HIGHWAY COMMISSION

INTERSTATE #95
OVER
MESSALONSKEE STREAM
& QUARRY ROAD (RELOC.)
IN THE CITY OF
WATERVILLE
KENNEBEC COUNTY

BORING LOG

SHEET 3 OF 23 SHEETS
AUGUSTA, MAINE

78-175

0 1 2 3 4 5 INCHES

B.P.R. REG. NO.	STATE	PROJECT NO.	SHEET NO.	TOTAL SHEETS
1	MAINE	I-95-6 (23)	11	32

WATERVILLE INTERSTATE

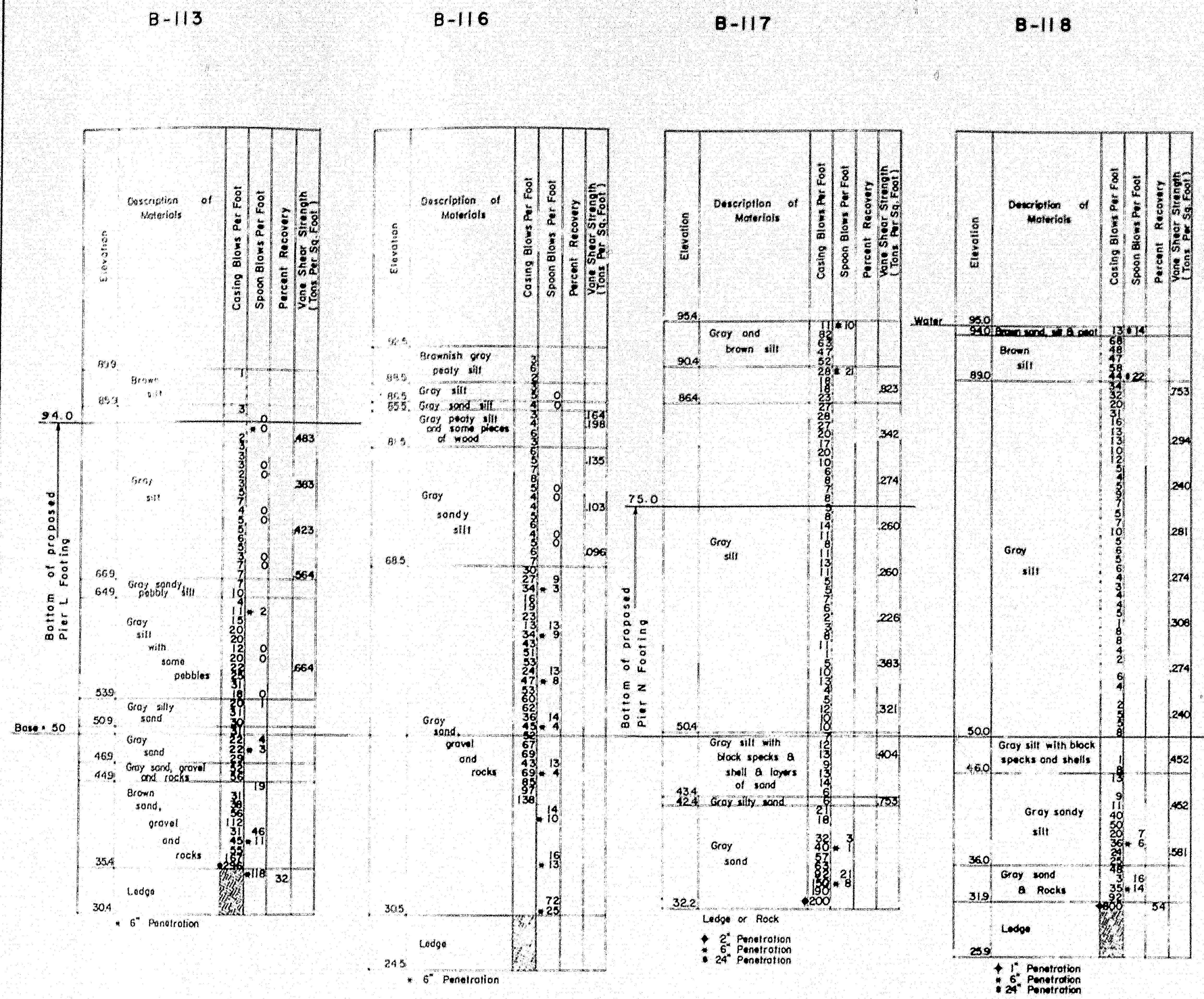

B-113
B-116
B-117
B-118
Elevation
Description of Materials
Casing Blows Per Foot
Spoon Blows Per Foot
Percent Recovery
Vane Shear Strength (Tons Per Sq. Foot)
B-113: 89.9 Brown silt 85.9
94.0
Gray silt
.483 .383 .423 .564
66.9 Gray sandy pebbly silt 64.9
Gray silt with some pebbles
.664
53.9 Gray silty sand 50.9
Base = 50
Gray sand 46.9
Gray sand, gravel and rocks 44.9
Brown sand, gravel and rocks 35.4
Ledge 30.4
Bottom of proposed Pier L Footing
* 6" Penetration
B-116: 92.5 Brownish gray peaty silt 88.5
Gray silt 86.5
Gray sand silt 85.5
Gray peaty silt and some pieces of wood 81.5
.164 .198 .135 .103 .096
Gray sandy silt 68.5
Gray sand, gravel and rocks 30.5
Ledge 24.5
* 6" Penetration
B-117: 95.4 Gray and brown silt 90.4
86.4
.823 .342 .274
75.0
Bottom of proposed Pier N Footing
Gray silt
.260 .260 .226 .383 .321
50.4 Gray silt with black specks & shell & layers of sand 43.4
.404
42.4 Gray silty sand
.753
Gray sand 32.2
Ledge or Rock
◆ 2" Penetration
* 6" Penetration
● 24" Penetration
B-118: Water 95.0
94.0 Brown sand, silt & peat
Brown silt 89.0
.753 .294 .240 .281 .274 .308 .274 .240
Gray silt
50.0 Gray silt with black specks and shells 46.0
.452 .452
Gray sandy silt
.581
36.0 Gray sand & Rocks 31.9
54
Ledge 25.9
✦ 1" Penetration
* 6" Penetration
● 24" Penetration

BORING LOG

Scale: 1/8" = 1'-0"

Note: For borings notes see Sheet 3.

PB-106

Elev.	Depth in Feet	No. of Blows	Remarks
93.15			Ground Elev.
	0 - 2		Hand
	2 - 3	23	
	3 - 4	33	
	4 - 5	40	
	5 - 6	56	
	6 - 7	53	
	7 - 8	51	
	8 - 9	41	
	9 - 10	27	
	10 - 11	20	
	11 - 12	18	
	12 - 13	20	
	13 - 14	23	
	14 - 15	18	
	15 - 16	21	
	16 - 17	20	
	17 - 18	30	
	18 - 19	26	
	19 - 20	31	
	20 - 21	29	
	21 - 22	43	
	22 - 23	39	
	23 - 24	43	
	24 - 25	46	
	25 - 26	46	
	26 - 27	52	
	27 - 28	44	
	28 - 29	48	
	29 - 30	50	
	30 - 31	38	
	31 - 32	38	
	32 - 33	59	
	33 - 34	58	
	34 - 35	63	
	35 - 36	48	
	36 - 37	64	
	37 - 38	61	
	38 - 39	59	
	39 - 40	55	
	40 - 41	60	
	41 - 42	58	
	42 - 43	58	
	43 - 44	85	
	44 - 45	80	
	45 - 46	80	
	46 - 47	93	
	47 - 48	107	
	48 - 49	127	
	49 - 50	107	
	50 - 51	140	
	51 - 52	138	
	52 - 53	160	
	53 - 54	152	
	54 - 55	131	
	55 - 56	132	
	56 - 56.7	139	Refusal

PB-107

Elev.	Depth in Feet	No. of Blows	Remarks
93.55			Water Elev.
92.22			Stream Bed El.
	0 - 31		Pushed Rods
	31 - 32	48	
	32 - 33	43	
	33 - 34	41	
	34 - 35	44	
	35 - 36	45	
	36 - 37	50	
	37 - 38	46	
	38 - 39	49	
	39 - 40	53	
	40 - 41	51	
	41 - 42	73	
	42 - 43	72	
	43 - 44	63	
	44 - 45	64	
	45 - 46	61	
	46 - 47	74	
	47 - 48	54	
	48 - 49	61	
	49 - 50	66	
	50 - 51	140	
	51 - 52	64	
	52 - 53	68	
	53 - 54	61	
	54 - 55	64	
	55 - 56	80	
	56 - 57	73	
	57 - 58	292	
	58 - 58.4	226	Refusal

PB-114

Elev.	Depth in Feet	No. of Blows	Remarks
94.7			Ground Elev.
	0 - 3		Hand
	3 - 4	27	
	4 - 5	19	
	5 - 6	17	
	6 - 7	18	
	7 - 8	24	
	8 - 9	20	
	9 - 10	22	
	10 - 11	20	
	11 - 12	16	
	12 - 13	13	
	13 - 14	13	
	14 - 15	13	
	15 - 16	15	
	16 - 17	12	
	17 - 18	14	
	18 - 19	16	
	19 - 20	14	
	20 - 21	15	
	21 - 22	18	
	22 - 23	19	
	23 - 24	26	
	24 - 25	21	
	25 - 26	23	
	26 - 27	25	
	27 - 28	23	
	28 - 29	39	
	29 - 30	30	
	30 - 31	28	
	31 - 32	28	
	32 - 33	32	
	33 - 34	35	
	34 - 35	40	
	35 - 36	39	
	36 - 37	31	
	37 - 38	43	
	38 - 39	49	
	39 - 40	56	
	40 - 41	51	
	41 - 42	46	
	42 - 43	53	
	43 - 44	58	
	44 - 45	63	
	45 - 46	66	
	46 - 47	69	
	47 - 48	56	
	48 - 49	57	
	49 - 50	52	
	50 - 51	53	
	51 - 52	67	
	52 - 53	83	
	53 - 54	96	
	54 - 55	99	
	55 - 56	143	
	56 - 57	139	
36.9	57 - 57.8	193	Bedrock-Refusal

Note: Bubbling well developed when rods were pulled. Hydraulic head of about 1 ft.

PB-115

Elev.	Depth in Feet	No. of Blows	Remarks
93.55			Water Elev.
92.22			Stream Bed El.
	0 - 6		Pushed Rods
	6 - 7	19	
	7 - 8	19	
	8 - 9	17	
	9 - 10	17	
	10 - 11	18	
	11 - 12	26	
	12 - 13	20	
	13 - 14	18	
	14 - 15	16	
	15 - 16	21	
	16 - 17	15	
	17 - 18	13	
	18 - 19	11	
	19 - 20	15	
	20 - 21	11	
	21 - 22	11	
	22 - 23	11	
	23 - 24	19	
	24 - 25	14	
	25 - 26	13	
	26 - 27	12	
	27 - 28	24	
	28 - 29	23	
	29 - 30	33	
	30 - 31	39	
	31 - 32	43	
	32 - 33	43	
	33 - 34	47	
	34 - 35	37	
	35 - 36	37	
	36 - 37	62	
	37 - 38	57	
	38 - 39	58	
	39 - 40	55	
	40 - 41	66	
	41 - 42	74	
	42 - 43	81	
	43 - 44	73	
	44 - 45	77	
	45 - 46	98	
	46 - 47	99	
	47 - 48	90	
	48 - 49	94	
	49 - 50	85	
	50 - 51	94	
	51 - 52	95	
	52 - 53	75	
	53 - 54	71	
	54 - 55	60	
	55 - 56	47	
	56 - 57	45	
	57 - 58	48	
	58 - 59	56	
	59 - 60	58	
	60 - 61	78	
	61 - 62	68	
	62 - 63	102	
	63 - 63.2	66	Refusal

PUNCHING LOG

Scale: 1/8" = 1'-0"

THE CLARKESON ENGINEERING CO., INC.

DESIGN	CHECK G.B.	BRIDGE NO.
DRAWN E.K.	APPROVED WAH-CJM	SURVEY PLOT

STATE HIGHWAY COMMISSION
INTERSTATE #95
OVER
MESSALONSKEE STREAM
& QUARRY ROAD (RELOC.)
IN THE CITY OF
WATERVILLE
KENNEBEC COUNTY
BORING LOG

SHEET 4 OF 23 SHEETS AUGUSTA, MAINE

78-176

0 1 2 3 4 5 INCHES

B.P.R. REG. NO.	STATE	PROJECT NO.	SHEET NO.	TOTAL SHEETS
1	MAINE	I-95-6(23)	12	32

WATERVILLE INTERSTATE

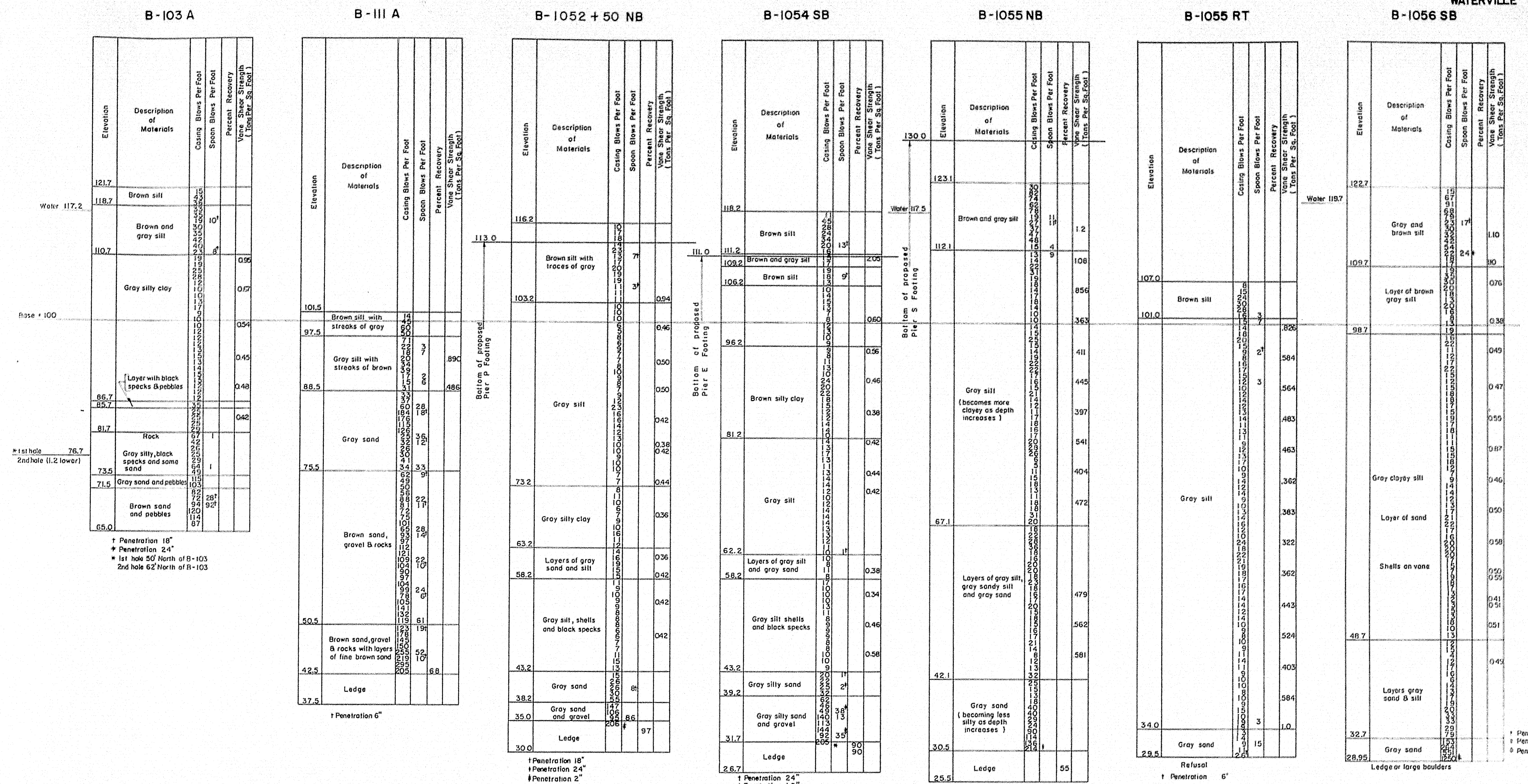

B-103 A
B-111 A
B-1052 + 50 NB
B-1054 SB
B-1055 NB
B-1055 RT
B-1056 SB
Elevation
Description of Materials
Casing Blows Per Foot
Spoon Blows Per Foot
Percent Recovery
Vane Shear Strength (Tons Per Sq. Foot)
Water 117.2
Base = 100
* 1st hole 76.7
2nd hole (1.2 lower)
Brown silt
Brown and gray silt
Gray silty clay
Layer with black specks & pebbles
Rock
Gray silty, black specks and some sand
Gray sand and pebbles
Brown sand and pebbles
† Penetration 18"
‡ Penetration 24"
* 1st hole 50' North of B-103
2nd hole 62' North of B-103
Brown silt with streaks of gray
Gray silt with streaks of brown
Gray sand
Brown sand, gravel & rocks
Brown sand, gravel & rocks with layers of fine brown sand
Ledge
† Penetration 6"
113.0
Bottom of proposed Pier P Footing
Brown silt with traces of gray
Gray silt
Gray silty clay
Layers of gray sand and silt
Gray silt, shells and black specks
Gray sand
Gray sand and gravel
Ledge
† Penetration 18"
‡ Penetration 24"
‖ Penetration 2"
111.0
Bottom of proposed Pier E Footing
Brown silt
Brown and gray silt
Brown silty clay
Gray silt
Layers of gray silt and gray sand
Gray silt shells and black specks
Gray silty sand
Gray silty sand and gravel
Ledge
† Penetration 24"
‡ Penetration 18"
‖ Penetration 2"
* Penetration 4"
130.0
Water 117.5
Bottom of proposed Pier S Footing
Brown and gray silt
Gray silt (becomes more clayey as depth increases)
Layers of gray silt, gray sandy silt and gray sand
Gray sand (becoming less silty as depth increases)
Ledge
† Penetration 6"
‡ Penetration 7"
Brown silt
Gray silt
Gray sand
Refusal
† Penetration 6"
Water 119.7
Gray and brown silt
Layer of brown gray silt
Gray clayey silt
Layer of sand
Shells on vane
Layers gray sand & silt
Gray sand
Ledge or large boulders
† Penetration 18"
‡ Penetration 24"
◊ Penetration 9"

BORING LOG

Scale: 1/8" = 1'-0"

For boring notes see sheet 3.

THE CLARKESON EN[illegible]ING CO., INC.

DESIGN	CHECK G B	BRIDGE NO.
DRAWN E.K.	APPROVED WAH-CJM	

STATE HIGHWA[illegible] COMMISSION

INTERSTATE #95
OVER
MESSALONSKEE STREAM
& QUARRY ROAD (RELOC.)
IN THE CITY OF
WATERVILLE
KENNEBEC COUNTY
BORING LOG

SHEET 5 OF 23 SHEETS AUGUSTA, MAINE

78-177

F.P.R. REG. NO.	STATE	PROJECT NO.	SHEET NO.	TOTAL SHEETS
1	MAINE	I-95-6 (23)	13	32

WATERVILLE INTERSTATE

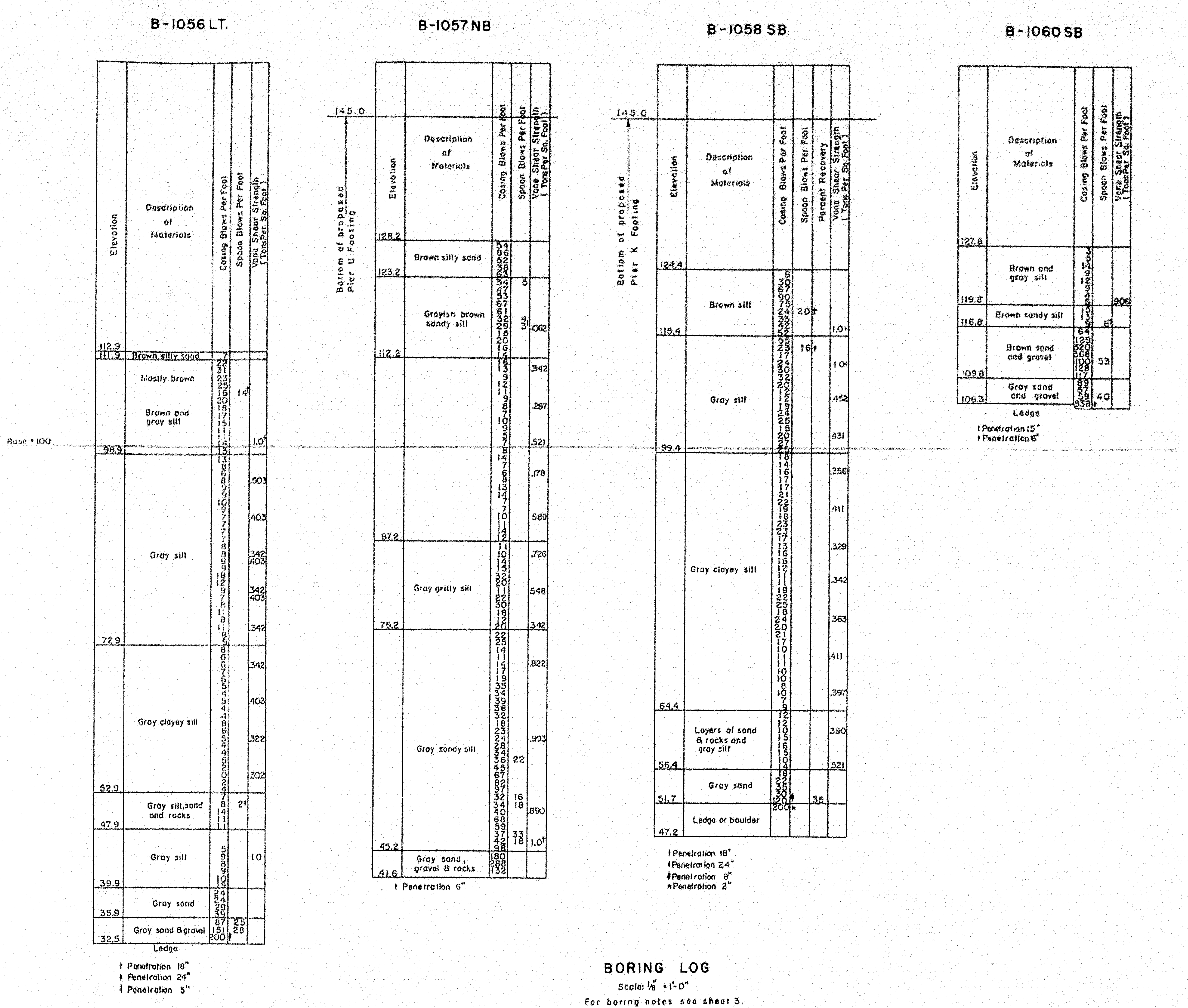
B-1056 LT.
B-1057 NB
B-1058 SB
B-1060 SB
Elevation
Description of Materials
Casing Blows Per Foot
Spoon Blows Per Foot
Percent Recovery
Vane Shear Strength (Tons Per Sq. Foot)
145.0
Bottom of proposed Pier U Footing
Bottom of proposed Pier K Footing
Base = 100
112.9
111.9
Brown silty sand
Mostly brown
Brown and gray silt
98.9
Gray silt
72.9
Gray clayey silt
52.9
Gray silt, sand and rocks
47.9
Gray silt
39.9
Gray sand
35.9
Gray sand & gravel
32.5
Ledge
† Penetration 18"
‡ Penetration 24"
‖ Penetration 5"
128.2
Brown silty sand
123.2
Grayish brown sandy silt
112.2
87.2
Gray gritty silt
75.2
Gray sandy silt
45.2
Gray sand, gravel & rocks
41.6
† Penetration 6"
124.4
Brown silt
115.4
Gray silt
99.4
Gray clayey silt
64.4
Layers of sand & rocks and gray silt
56.4
Gray sand
51.7
Ledge or boulder
47.2
† Penetration 18"
‡ Penetration 24"
# Penetration 8"
* Penetration 2"
127.8
Brown and gray silt
119.8
Brown sandy silt
116.8
Brown sand and gravel
109.8
Gray sand and gravel
106.3
Ledge
† Penetration 15"
‡ Penetration 6"

BORING LOG

Scale: 1/8" = 1'-0"

For boring notes see sheet 3.

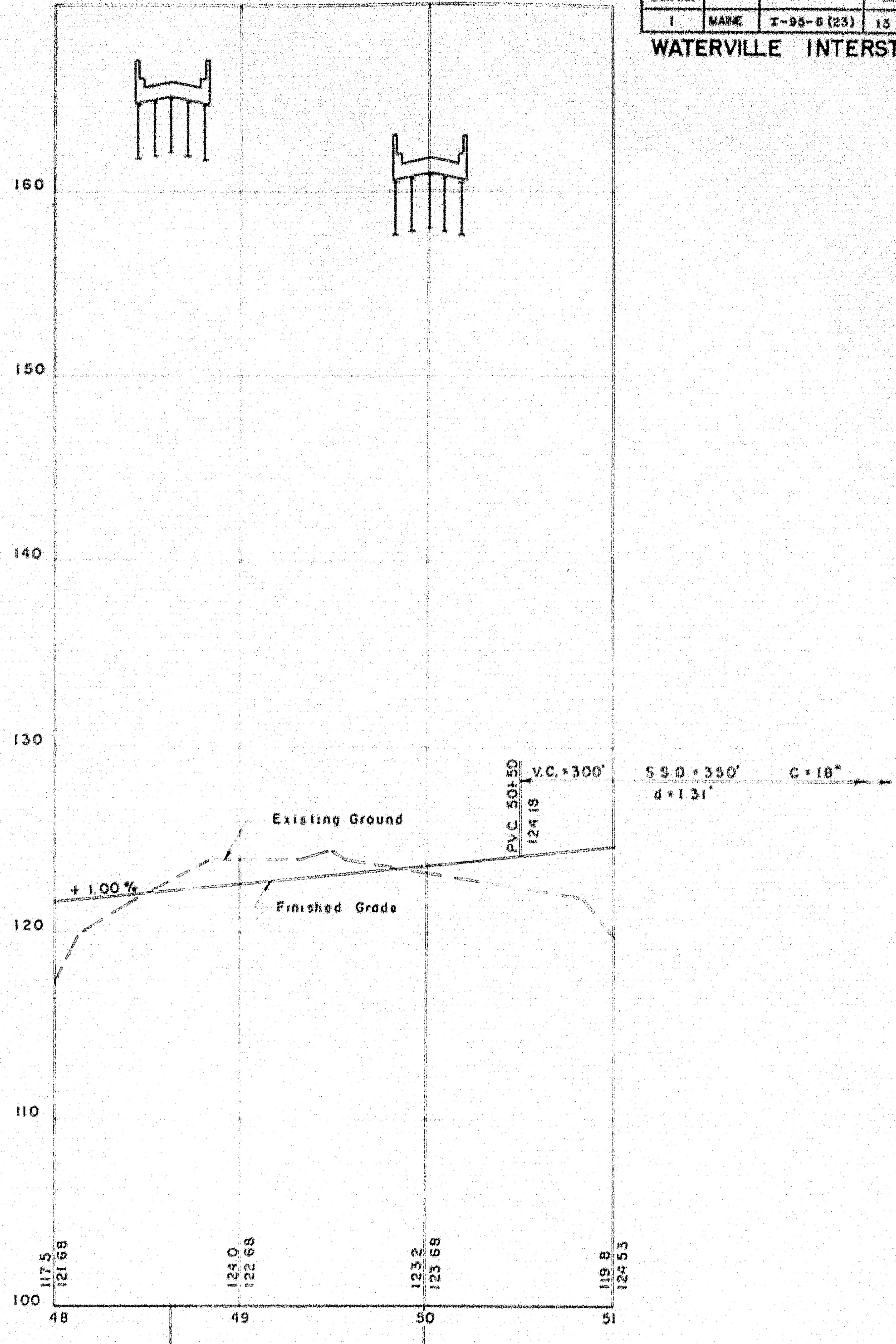
160
150
140
130
120
110
100
V.C. = 300'
S.S.D. = 350'
C = 18"
d = 1.31'
P.V.C. 50+50
124.18
Existing Ground
+1.00%
Finished Grade
117.5
121.68
124.0
122.68
123.2
123.68
119.8
124.53
48
49
50
51

Sta. 48+62.49 Quarry Rd. Relocation
Sta. 1055+79.62 Southbound Interstate # 95

Sta. 50+00.00 Quarry Rd. Relocation
Sta. 1054+01.95 Northbound Interstate # 95

PROFILE ALONG QUARRY ROAD RELOCATION

Scale: 1" = 50'-0"

THE CLARKESON ENGINEERING CO. INC.

DESIGN	CHECK G.B.
DRAWN E.K.	APPROVED W.A.H.-C.J.M.

STATE HIGHWAY COMMISSION

INTERSTATE #95
OVER
MESSALONSKEE STREAM & QUARRY ROAD (RELOC.)
IN THE CITY OF
WATERVILLE
KENNEBEC COUNTY
BORING LOG

SHEET 6 OF 23 SHEETS AUGUSTA, MAINE

78-178

0 1 2 3 4 5 INCHES

F.A.P. REG. NO.	STATE	PROJECT NO.	SHEET NO.	TOTAL SHEETS
1	MAINE	I-95-6(23)	14	32

WATERVILLE INTERSTATE

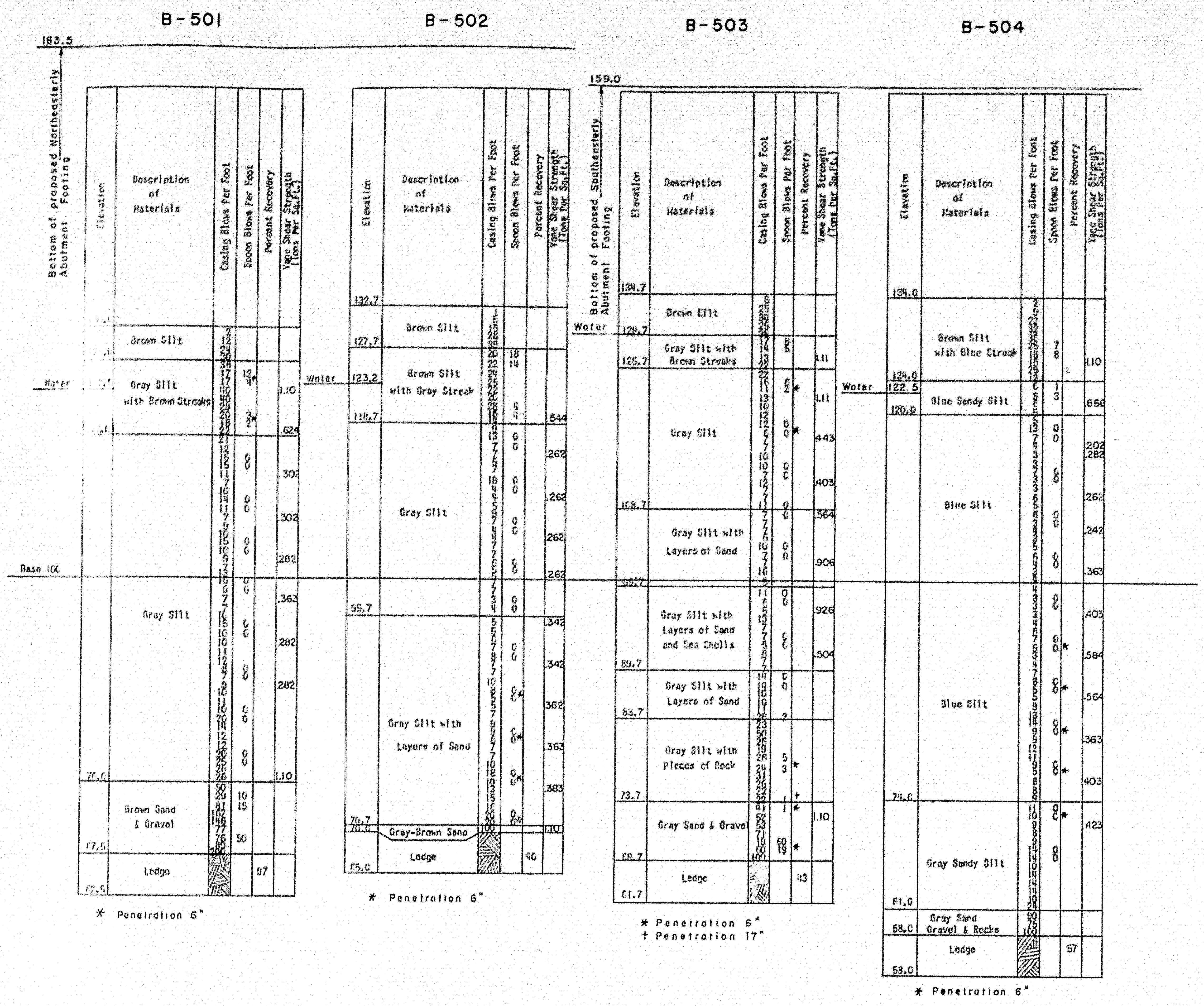
B-501
B-502
B-503
B-504
163.5
159.0
Bottom of proposed Northeasterly Abutment Footing
Bottom of proposed Southeasterly Abutment Footing
Elevation
Description of Materials
Casing Blows Per Foot
Spoon Blows Per Foot
Percent Recovery
Vane Shear Strength (Tons Per Sq.Ft.)
Water
Base 100
Brown Silt
Gray Silt with Brown Streaks
Gray Silt
Brown Sand & Gravel
Ledge
76.0
67.5
97
132.7
127.7
123.2
118.7
95.7
70.7
70.0
65.0
Brown Silt with Gray Streak
Gray Silt with Layers of Sand
Gray-Brown Sand
90
134.7
129.7
125.7
108.7
89.7
83.7
73.7
66.7
61.7
Gray Silt with Brown Streaks
Gray Silt with Layers of Sand and Sea Shells
Gray Silt with Pieces of Rock
Gray Sand & Gravel
43
134.0
124.0
122.5
120.0
74.0
61.0
58.0
53.0
Brown Silt with Blue Streak
Blue Sandy Silt
Blue Silt
Gray Sandy Silt
Gray Sand Gravel & Rocks
57
* Penetration 6"
* Penetration 6"
+ Penetration 17"

BORING LOG

Scale 1/8" = 1'-0"

Notes:
1. Location of borings are shown on Key Plan thus ◉ B-501.
2. Borings are taken for purpose of design and show condition at boring points only, but do not necessarily show nature of materials to be encountered during construction.
3. Figures in boring columns indicate blows per foot on 2 1/2" or 4" casing, sample tube, or 1 5/8" spoon produced by a 304 # hammer with a fall of 16", 18" and 14" respectively.
4. Borings were taken by Maine Highway Commission during the month of November 1958.

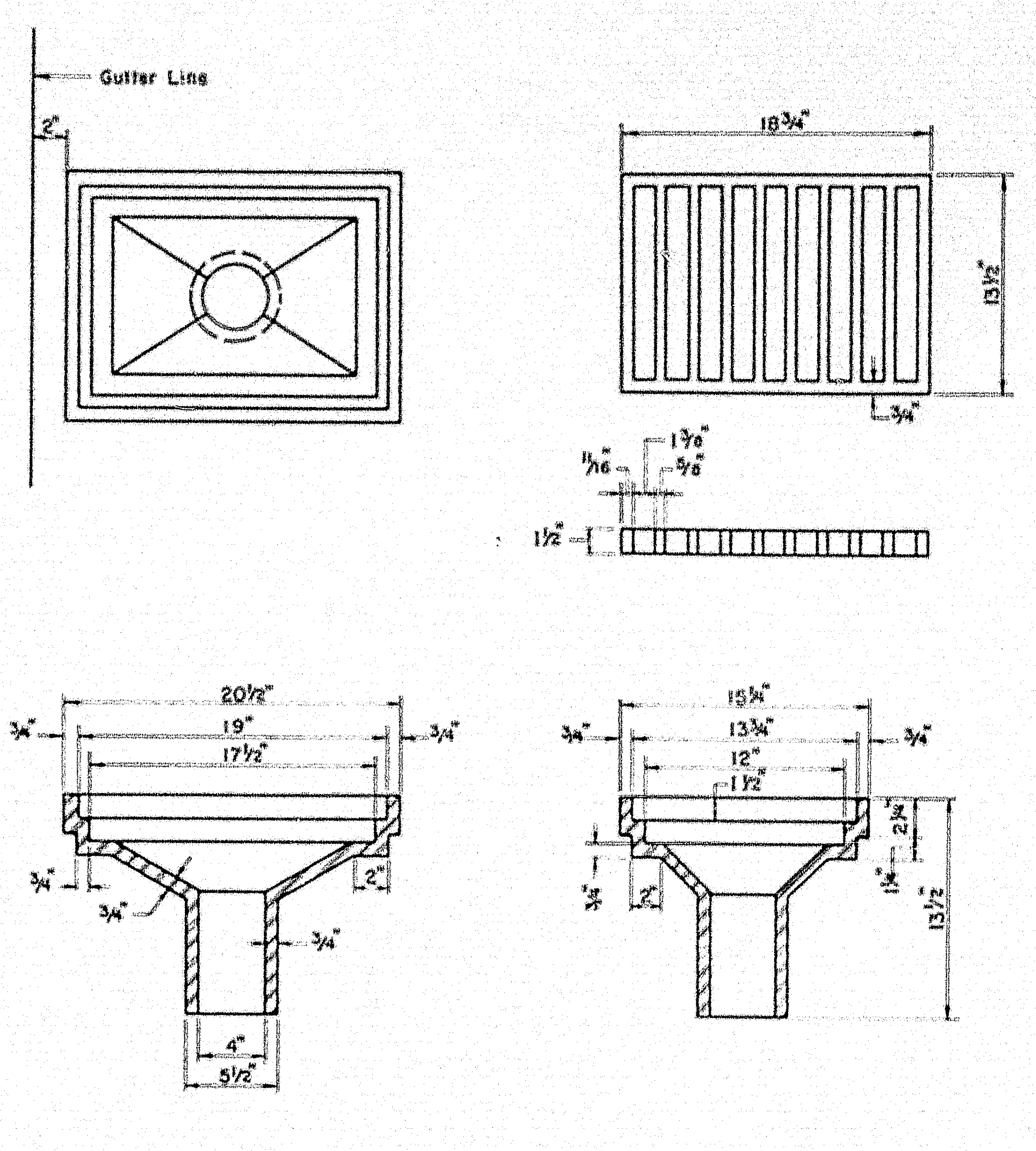
Gutter Line
2"
18 3/4"
13 1/2"
3/4"
1 3/8"
5/8"
1/16"
1 1/2"
20 1/2"
19"
17 1/2"
15 3/4"
13 3/4"
12"
1 1/2"
2"
4"
5 1/2"
2 1/2"

SCUPPER DETAILS

Scale: 1 1/2" = 1'-0"

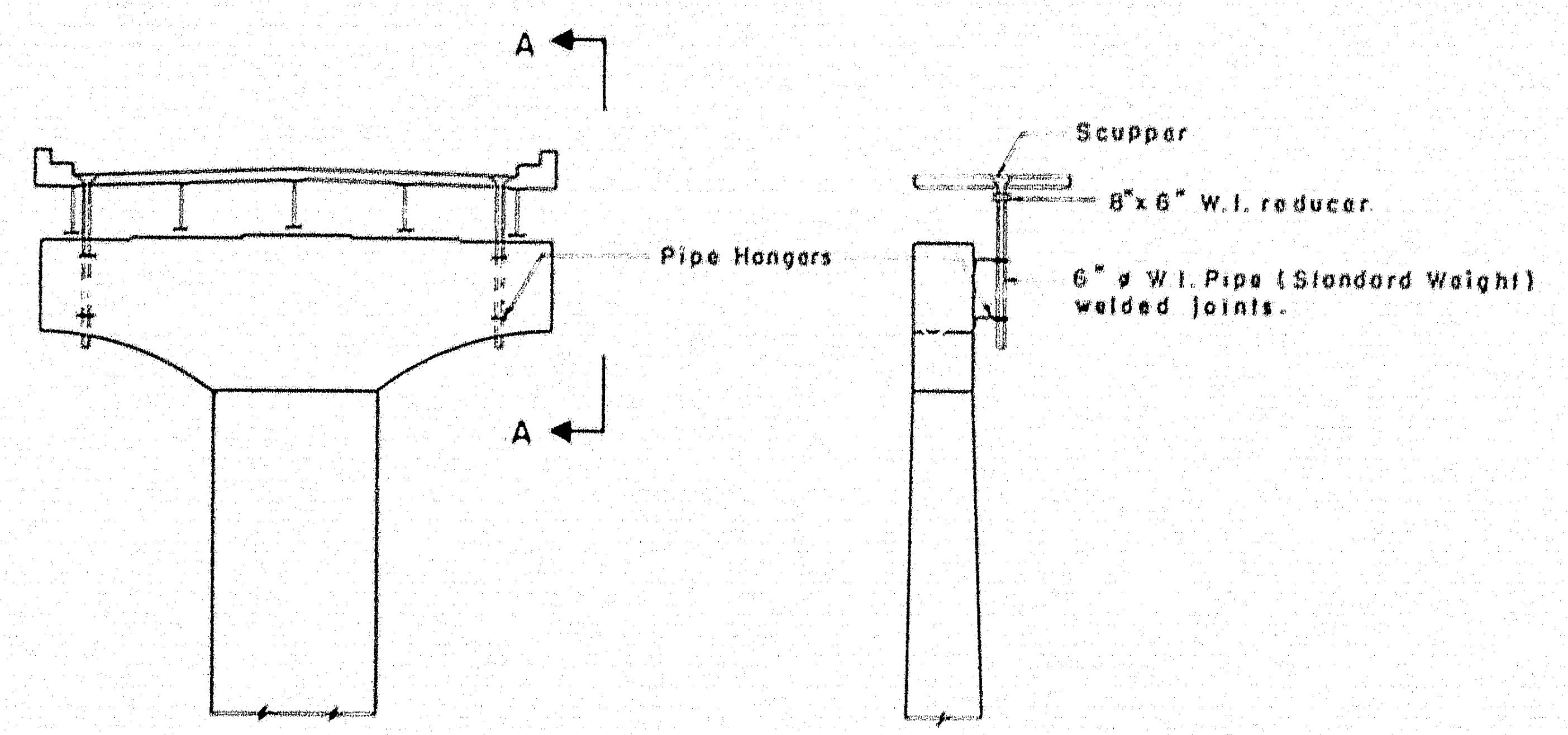
A
A
Pipe Hangers
Scupper
8" x 6" W.I. reducer
6" ⌀ W.I. Pipe (Standard Weight) welded joints.

SECTION A-A

PIPE DETAILS AT PIERS

Scale: 3/32" = 1'-0"

Notes:
1. All joints to be welded.
2. For location of scuppers see sheets 8, 9 & 10.
3. The Contractor shall submit complete drawings of the piping system to the Engineer for approval.
4. Pipe hangers to be Standard 1 1/2" x 3/8" clamps and anchor straps. Anchor straps to be fastened to pier cap with 3/4" ⌀ cinch bolts (6" into concrete), two bolts per strap.
5. Scupper pipes at piers to be carried 6" below pier cap. Scupper pipes in girder spans to be carried 6" below structural steel.

THE CLARKESON ENGINEERING CO. INC.

DESIGN	CHECK H.P.	BRIDGE NO.
DRAWN R.J.F.	APPROVED W.A.H.-C.J.M.	SURVEY PLOT

STATE HIGHWAY COMMISSION
INTERSTATE #95
OVER
MESSALONSKEE STREAM
& QUARRY ROAD (RELOC.)
IN THE CITY OF
WATERVILLE
KENNEBEC COUNTY
BORING LOG

SHEET 7 OF 23 SHEETS
AUGUSTA, MAINE

78-179

B.P.R. REG. NO.	STATE	PROJECT NO.	SHEET NO.	TOTAL SHEETS
1	MAINE	I-95-6 (23)	15	32

WATERVILLE INTERSTATE

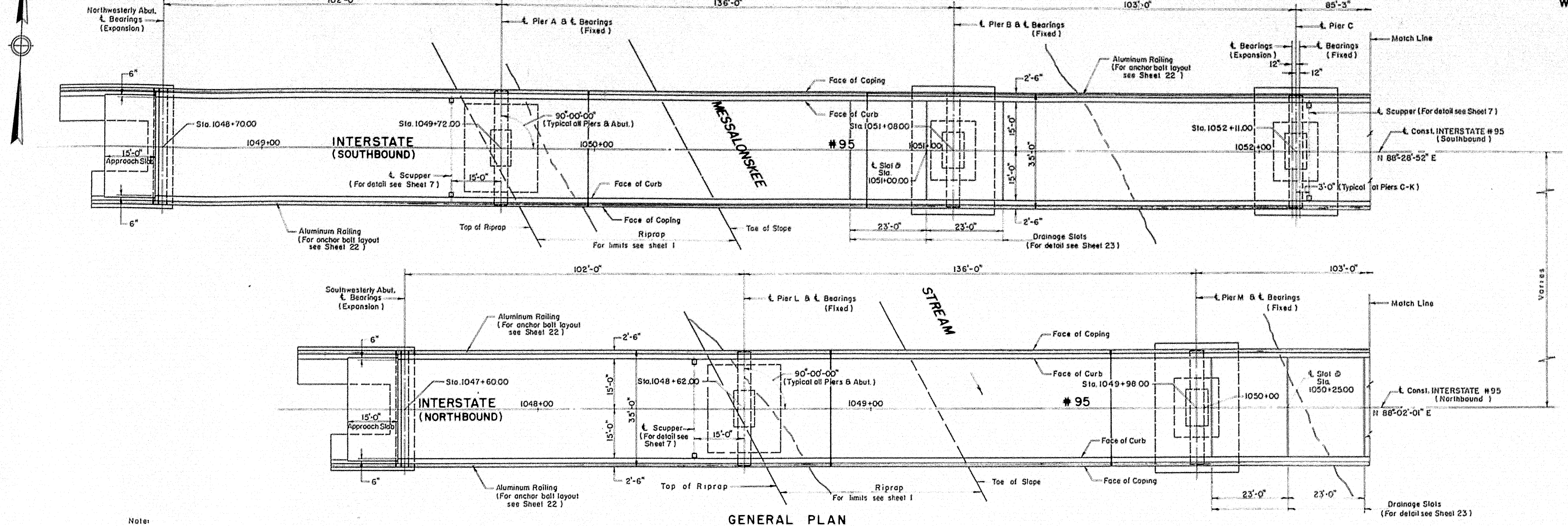

102'-0"
136'-0"
103'-0"
85'-3"
Northwesterly Abut. ℄ Bearings (Expansion)
℄ Pier A & ℄ Bearings (Fixed)
℄ Pier B & ℄ Bearings (Fixed)
℄ Pier C
℄ Bearings (Expansion)
℄ Bearings (Fixed)
12"
Match Line
Aluminum Railing (For anchor bolt layout see Sheet 22)
Face of Coping
Face of Curb
2'-6"
6"
Sta. 1048+70.00
Sta. 1049+72.00
90°-00'-00" (Typical all Piers & Abut.)
1049+00
1050+00
INTERSTATE (SOUTHBOUND)
MESSALONSKEE
#95
Sta. 1051+08.00
1051+00
℄ Slot & Sta. 1051+00.00
15'-0"
35'-0"
15'-0" Approach Slab
℄ Scupper (For detail see Sheet 7)
Sta. 1052+11.00
1052+00
℄ Scupper (For detail see Sheet 7)
℄ Const. INTERSTATE #95 (Southbound)
N 88°-28'-52" E
3'-0" (Typical at Piers C-K)
Top of Riprap
Face of Coping
Riprap For limits see sheet 1
Toe of Slope
23'-0"
Drainage Slots (For detail see Sheet 23)
Varies
Southwesterly Abut. ℄ Bearings (Expansion)
℄ Pier L & ℄ Bearings (Fixed)
STREAM
℄ Pier M & ℄ Bearings (Fixed)
Sta. 1047+60.00
INTERSTATE (NORTHBOUND)
1048+00
Sta. 1048+62.00
90°-00'-00" (Typical all Piers & Abut.)
1049+00
℄ Scupper (For detail see Sheet 7)
Sta. 1049+98.00
1050+00
℄ Slot & Sta. 1050+25.00
℄ Const. INTERSTATE #95 (Northbound)
N 88°-02'-01" E
Top of Riprap
Riprap For limits see sheet 1
Toe of Slope
Face of Coping
Face of Curb
Drainage Slots (For detail see Sheet 23)

Note:
Provide for railing expansion in panels over westerly abutments, Piers C to K, Piers N to U inclusive and over hinge locations.

GENERAL PLAN

Scale 1/16" = 1'-0"

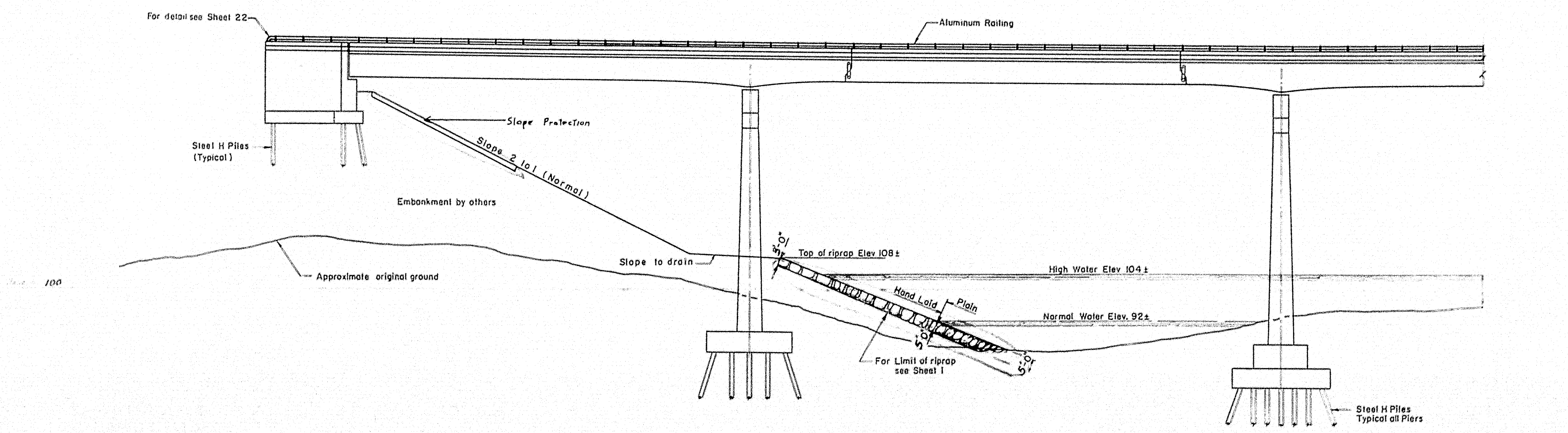

Match Line
For detail see Sheet 22
Aluminum Railing
Slope Protection
Slope 2 to 1 (Normal)
Steel H Piles (Typical)
Embankment by others
Top of riprap Elev 108±
3'-0"
Slope to drain
High Water Elev 104±
Approximate original ground
Hand Laid
Plain
Normal Water Elev. 92±
5'-0"
For Limit of riprap see Sheet 1
Steel H Piles Typical all Piers
100

GENERAL ELEVATION

Scale: 1/16" = 1'-0"

THE CLARKESON ENGINEERING CO. INC.

DESIGN G. B.	CHECK J. T. & H. P.	[illegible]
DRAWN E. K.	APPROVED W.A.H.-C.J.M.	[illegible]

STATE HIGHWAY COMMISSION
INTERSTATE #95
OVER
MESSALONSKEE STREAM
& QUARRY ROAD (RELOC.)
IN THE CITY OF
WATERVILLE
KENNEBEC COUNTY
GENERAL PLAN & ELEVATION
SHEET 8 OF 23 SHEETS
AUGUSTA, MAINE

78-180

0 1 2 3 4 5 INCHES

B.P.R. REG. NO.	STATE	PROJECT NO.	SHEET NO.	TOTAL SHEETS
1	MAINE	I-95-6 (23)	16	32

WATERVILLE INTERSTATE

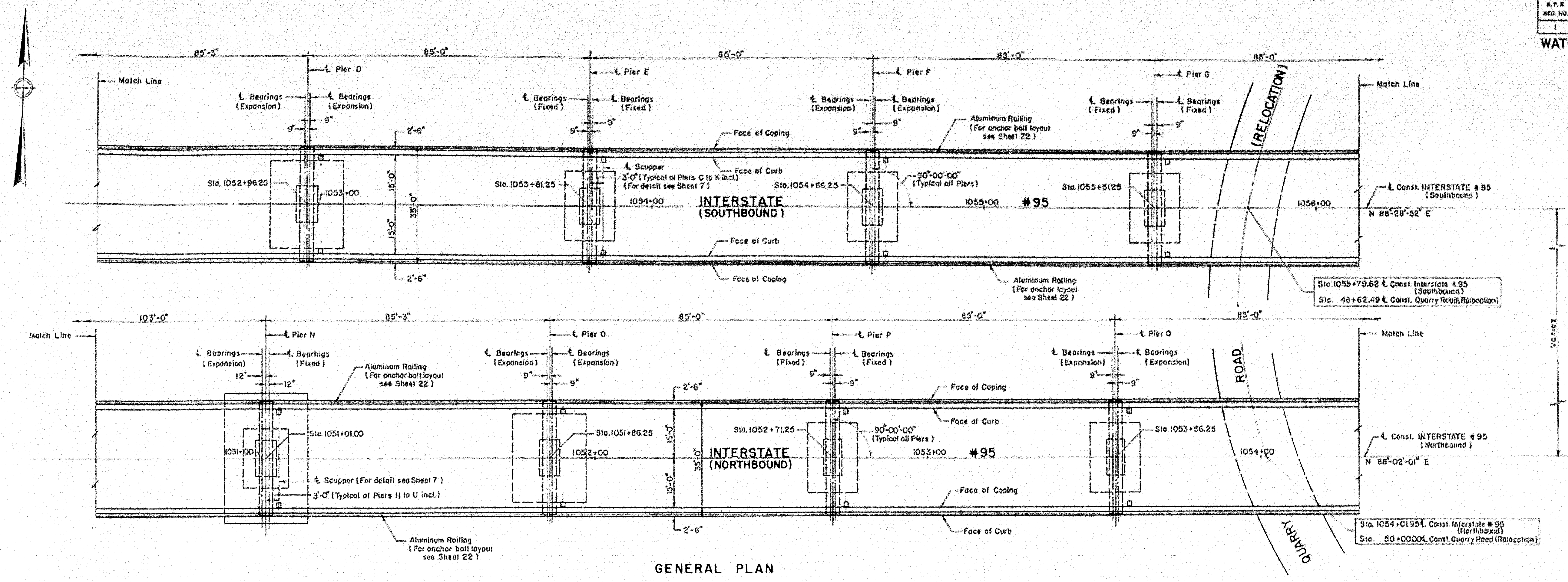

85'-3"
85'-0"
85'-0"
85'-0"
85'-0"
Match Line
℄ Pier D
℄ Pier E
℄ Pier F
℄ Pier G
℄ Bearings (Expansion)
℄ Bearings (Expansion)
℄ Bearings (Fixed)
℄ Bearings (Fixed)
℄ Bearings (Expansion)
℄ Bearings (Expansion)
℄ Bearings (Fixed)
℄ Bearings (Fixed)
9"
2'-6"
Face of Coping
Aluminum Railing (For anchor bolt layout see Sheet 22)
(RELOCATION)
Match Line
℄ Scupper
3'-0" (Typical at Piers C to K incl.) (For detail see Sheet 7)
Face of Curb
90°-00'-00" (Typical all Piers)
Sta. 1052+96.25
1053+00
Sta. 1053+81.25
1054+00
INTERSTATE (SOUTHBOUND)
Sta. 1054+66.25
1055+00
#95
Sta. 1055+51.25
1056+00
℄ Const. INTERSTATE #95 (Southbound)
N 88°-28'-52" E
15'-0"
35'-0"
15'-0"
Face of Curb
Face of Coping
2'-6"
Aluminum Railing (For anchor bolt layout see Sheet 22)
Sta. 1055+79.62 ℄ Const. Interstate #95 (Southbound)
Sta. 48+62.49 ℄ Const. Quarry Road (Relocation)
Varies
103'-0"
85'-3"
85'-0"
85'-0"
85'-0"
Match Line
℄ Pier N
℄ Pier O
℄ Pier P
℄ Pier Q
℄ Bearings (Expansion)
℄ Bearings (Fixed)
℄ Bearings (Expansion)
℄ Bearings (Expansion)
℄ Bearings (Fixed)
℄ Bearings (Fixed)
℄ Bearings (Expansion)
℄ Bearings (Expansion)
12"
12"
9"
Aluminum Railing (For anchor bolt layout see Sheet 22)
2'-6"
Face of Coping
Face of Curb
ROAD
Match Line
Sta. 1051+01.00
1051+00
Sta. 1051+86.25
1052+00
INTERSTATE (NORTHBOUND)
Sta. 1052+71.25
90°-00'-00" (Typical all Piers)
1053+00
#95
Sta. 1053+56.25
1054+00
℄ Const. INTERSTATE #95 (Northbound)
N 88°-02'-01" E
15'-0"
35'-0"
15'-0"
℄ Scupper (For detail see Sheet 7)
3'-0" (Typical at Piers N to U incl.)
Face of Coping
Face of Curb
QUARRY
2'-6"
Aluminum Railing (For anchor bolt layout see Sheet 22)
Sta. 1054+01.95 ℄ Const. Interstate #95 (Northbound)
Sta. 50+00.00 ℄ Const. Quarry Road (Relocation)

GENERAL PLAN

Scale: 1/16" = 1'-0"

Note.
For railing expansion note see Sheet 8

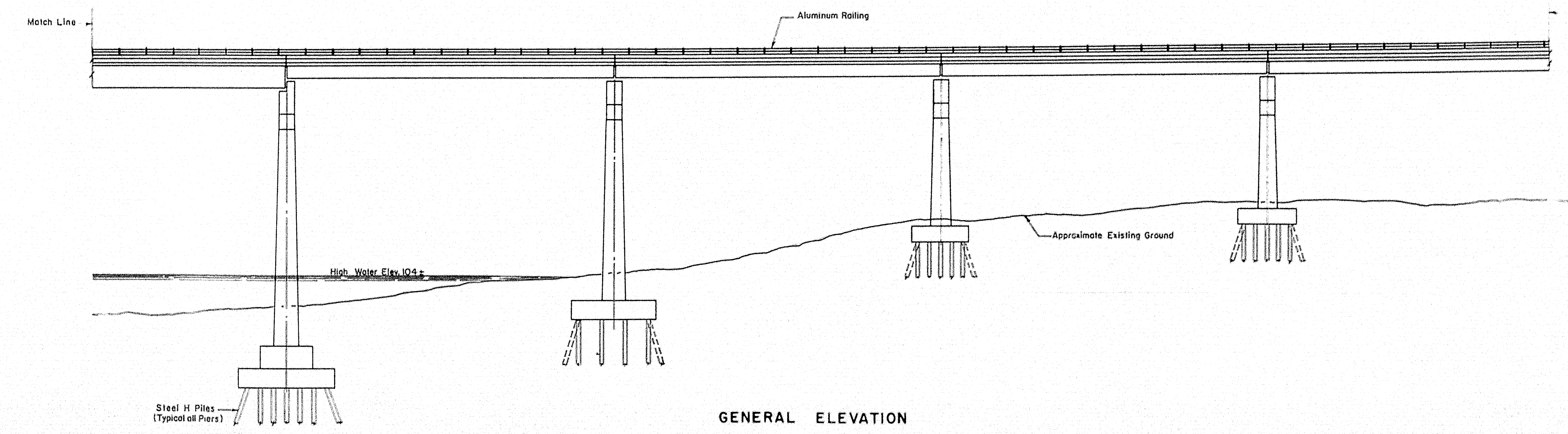

Match Line
Aluminum Railing
Match Line
Approximate Existing Ground
High Water Elev. 104±
Steel H Piles (Typical all Piers)

GENERAL ELEVATION

Scale: 1/16" = 1'-0"

THE CLARKESON ENGINEERING CO., INC.

DESIGN G. B.	CHECK J.T. & H.P.
DRAWN E. K.	APPROVED W.A.H.-G.J.M.

STATE HIGHWAY COMMISSION
INTERSTATE #95
OVER
MESSALONSKEE STREAM & QUARRY ROAD (RELOC.)
IN THE CITY OF
WATERVILLE
KENNEBEC COUNTY
GENERAL PLAN & ELEVATION
SHEET 9 OF 23 SHEETS AUGUSTA, MAINE

78-181

0 1 2 3 4 5 INCHES

F.P.R. REG. NO.	STATE	PROJECT NO.	SHEET NO.	TOTAL SHEETS
1	MAINE	I-95-6(23)	17	32

WATERVILLE INTERSTATE

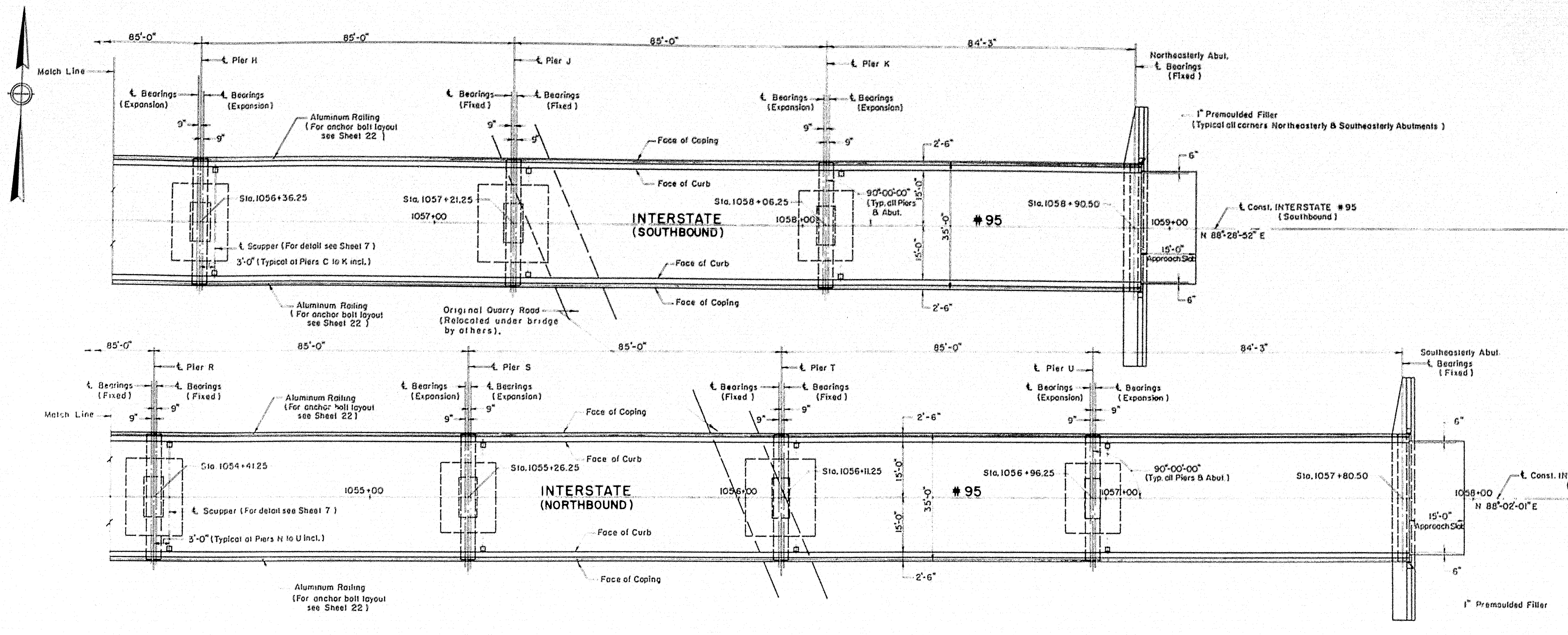

Match Line
85'-0"
85'-0"
85'-0"
84'-3"
℄ Pier H
℄ Pier J
℄ Pier K
℄ Bearings (Expansion)
℄ Bearings (Fixed)
Northeasterly Abut. ℄ Bearings (Fixed)
1" Premoulded Filler (Typical all corners Northeasterly & Southeasterly Abutments)
Aluminum Railing (For anchor bolt layout see Sheet 22)
Face of Coping
Face of Curb
9"
2'-6"
6"
Sta. 1056+36.25
Sta. 1057+21.25
1057+00
Sta. 1058+06.25
1058+00
90°-00'-00" (Typ. all Piers & Abut.
Sta. 1058+90.50
1059+00
℄ Const. INTERSTATE #95 (Southbound)
N 88°-28'-32" E
INTERSTATE (SOUTHBOUND)
#95
15'-0"
35'-0"
15'-0" Approach Slab
℄ Scupper (For detail see Sheet 7)
3'-0" (Typical at Piers C to K incl.)
Original Quarry Road (Relocated under bridge by others).
Varies
85'-0"
85'-0"
85'-0"
85'-0"
84'-3"
℄ Pier R
℄ Pier S
℄ Pier T
℄ Pier U
Southeasterly Abut. ℄ Bearings (Fixed)
℄ Bearings (Fixed)
℄ Bearings (Expansion)
Sta. 1054+41.25
1055+00
Sta. 1055+26.25
1056+00
Sta. 1056+11.25
Sta. 1056+96.25
1057+00
90°-00'-00" (Typ. all Piers & Abut.)
Sta. 1057+80.50
1058+00
℄ Const. INTERSTATE #95 (Northbound)
N 88°-02'-01" E
INTERSTATE (NORTHBOUND)
#95
℄ Scupper (For detail see Sheet 7)
3'-0" (Typical at Piers N to U incl.)
15'-0"
35'-0"
15'-0" Approach Slab
1" Premoulded Filler

GENERAL PLAN

Scale: 1/16" = 1'-0"

Note:
For railing expansion note see Sheet 8

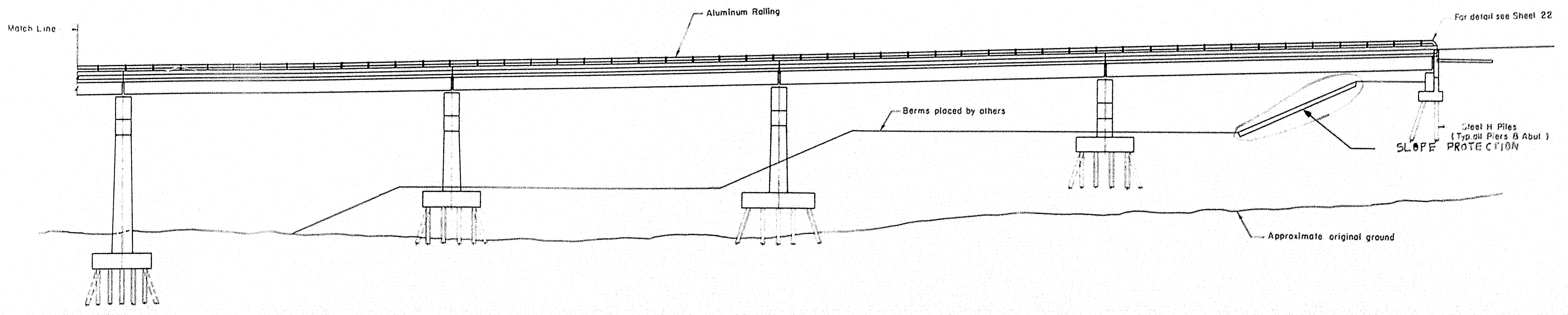

Match Line
Aluminum Railing
For detail see Sheet 22
Berms placed by others
Steel H Piles (Typ. all Piers & Abut.)
SLOPE PROTECTION
Approximate original ground

GENERAL ELEVATION

Scale: 1/16" = 1'-0"

THE CLARKESON ENGINEERING CO. INC.

DESIGN G.B.	CH'D. J.T. & H.P.	BRIDGE NO.
		SURVEY
DRAWN E.K.	APPROVED W.A.H.-C.J.M.	PLOT

STATE HIGHWAY COMMISSION
INTERSTATE #95
OVER
MESSALONSKEE STREAM
& QUARRY ROAD (RELOC.)
IN THE CITY OF
WATERVILLE
KENNEBEC COUNTY
GENERAL PLAN & ELEVATION
SHEET 10 OF 23 SHEETS AUGUSTA, MAINE

78-182

0 1 2 3 4 5 INCHES

B.P.R. REG. NO.	STATE	PROJECT NO.	SHEET NO.	TOTAL SHEETS
1	MAINE	I-95-6(23)	18	32

WATERVILLE INTERSTATE

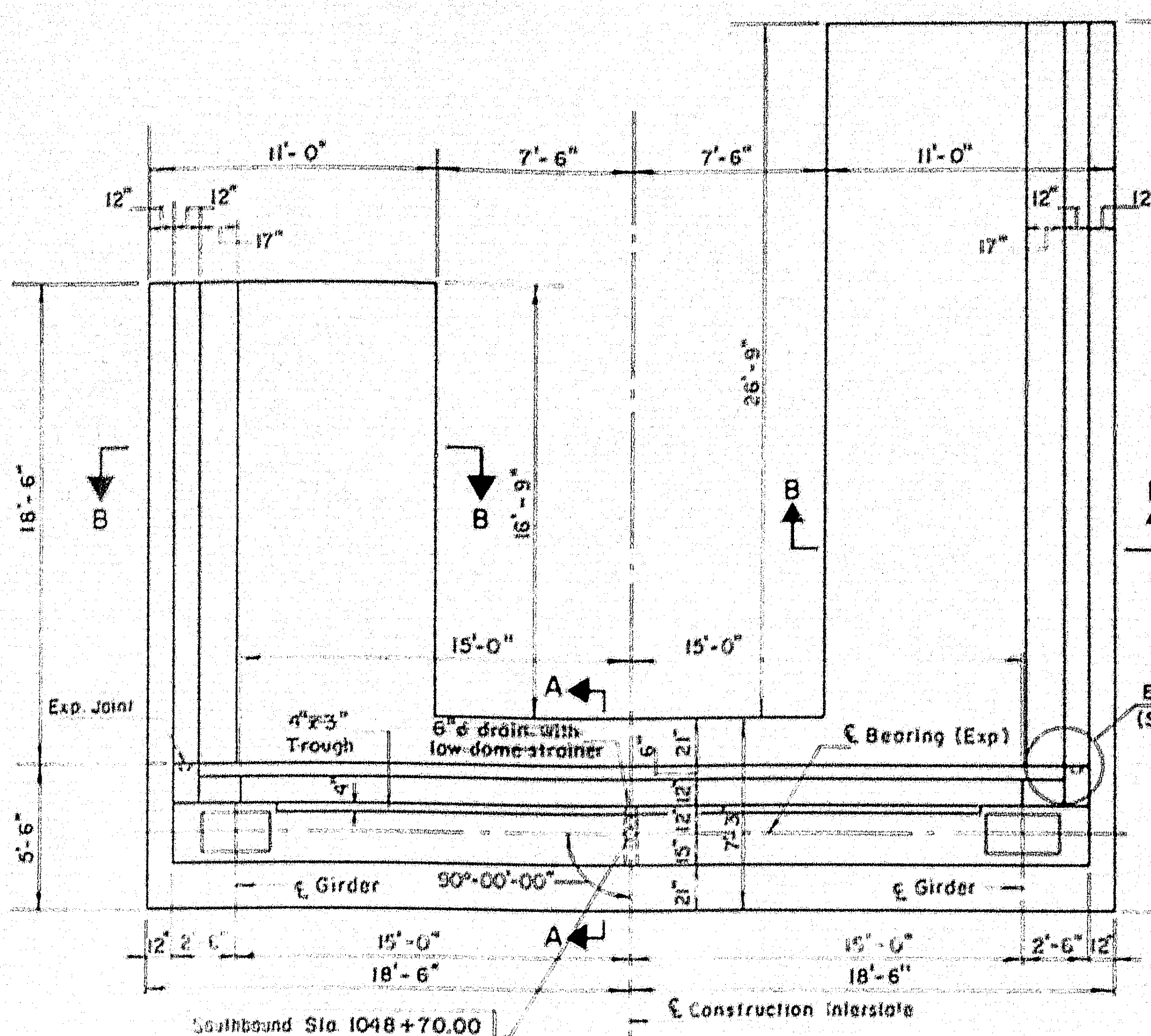
11'-0"
7'-6"
7'-6"
11'-0"
12"
17"
18'-6"
34'-0"
26'-9"
16'-9"
5'-6"
B
A
15'-0"
Exp. Joint
4"x3" Trough
6" drain with low dome strainer
℄ Bearing (Exp)
Exp Joint (See Detail "A")
℄ Girder
90°-00'-00"
18'-6"
2'-6"
Southbound Sta 1048+70.00
Northbound Sta 1047+60.00
℄ Construction Interstate

PLAN

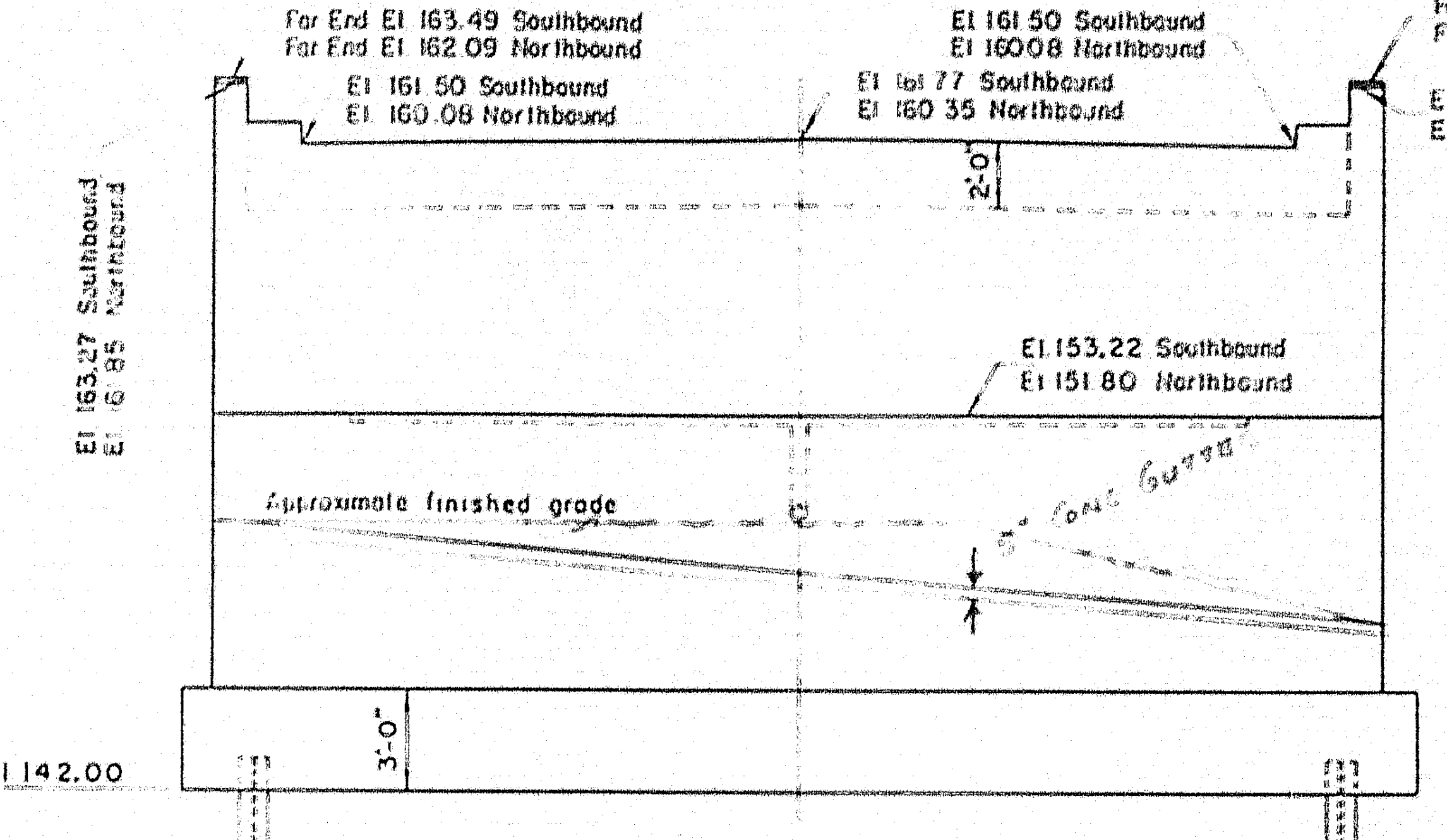
For End El 163.49 Southbound
For End El 162.09 Northbound
El 161.50 Southbound
El 160.08 Northbound
El 161.77 Southbound
El 160.35 Northbound
El 161.50 Southbound
El 160.08 Northbound
For End El 163.61 Southbound
For End El 162.22 Northbound
El 163.27 Southbound
El 161.85 Northbound
El 163.27 Southbound
El 161.85 Northbound
El 153.22 Southbound
El 151.80 Northbound
Approximate finished grade
2'-0"
3'-0"
El 142.00

ELEVATION

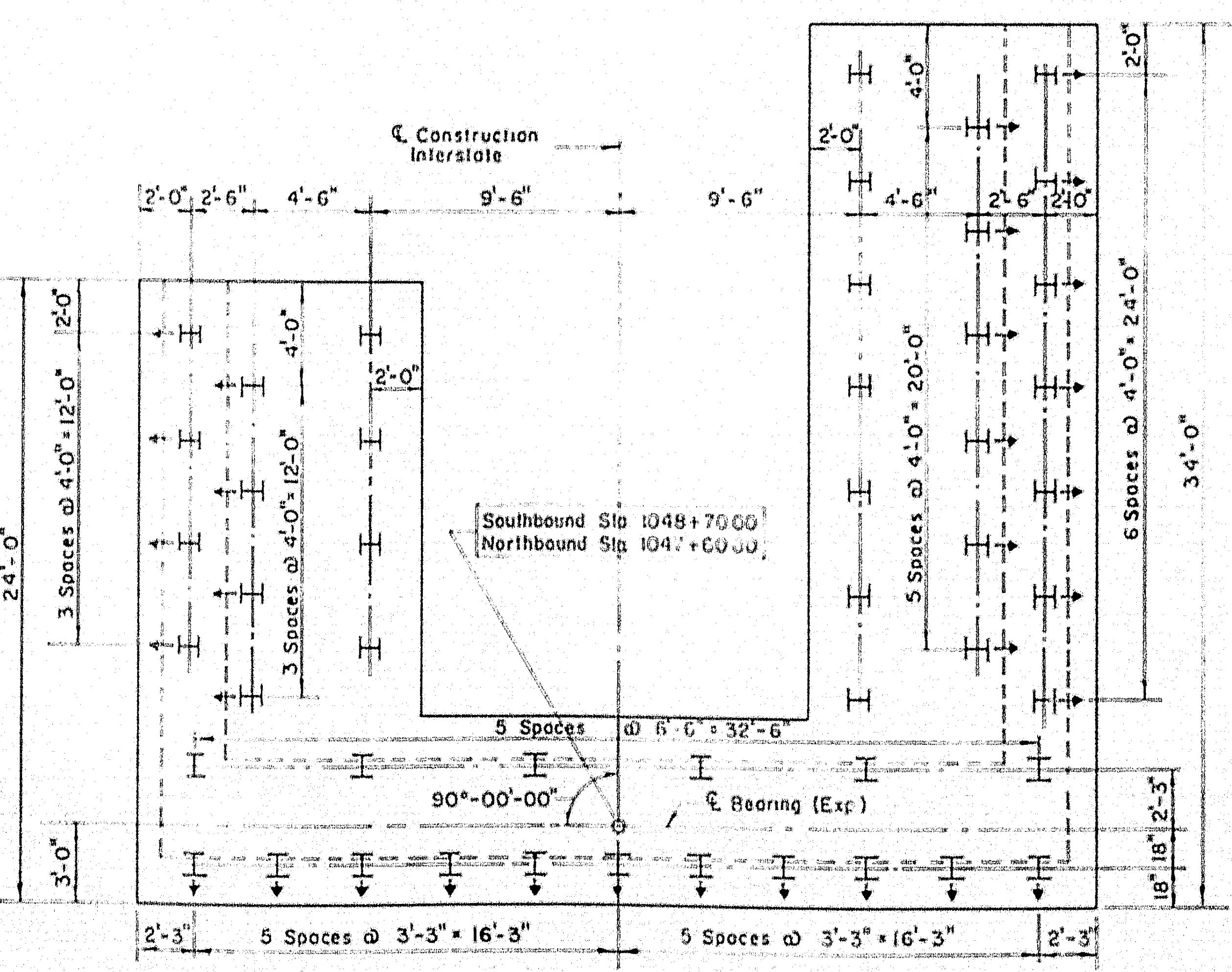
℄ Construction Interstate
2'-0"
2'-6"
4'-6"
9'-6"
9'-6"
4'-6"
2'-6"
2'-0"
3 Spaces @ 4'-0" = 12'-0"
24'-0"
3'-0"
Southbound Sta 1048+70.00
Northbound Sta 1047+60.00
5 Spaces @ 4'-0" = 20'-0"
6 Spaces @ 4'-0" = 24'-0"
34'-0"
5 Spaces @ 6'-0" = 32'-6"
90°-00'-00"
℄ Bearing (Exp)
2'-3"
5 Spaces @ 3'-3" = 16'-3"
5 Spaces @ 3'-3" = 16'-3"
2'-3"

PILE PLAN

49 piles required in each abutment

WESTERLY ABUTMENTS

Scale: 3/16" = 1'-0"

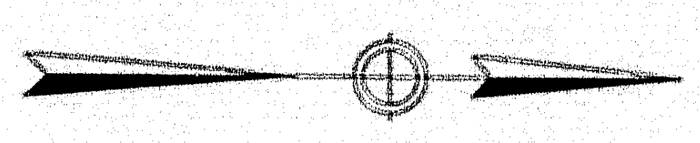

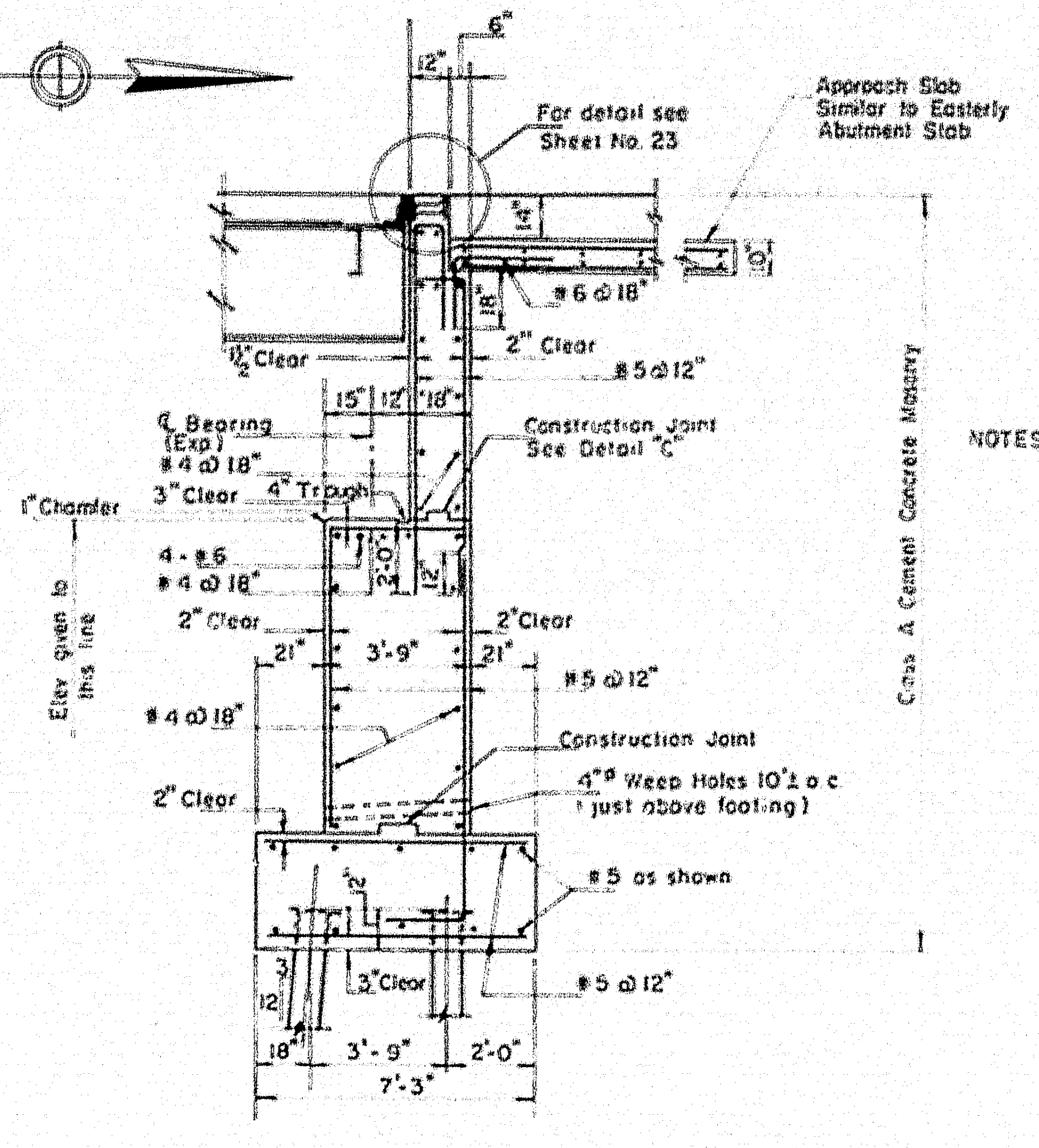
6"
For detail see Sheet No. 23
Approach Slab Similar to Easterly Abutment Slab
#6 @ 18"
1½" Clear
2" Clear
#5 @ 12"
℄ Bearing (Exp)
#4 @ 18"
3" Clear
4" Trough
Construction Joint See Detail "C"
1" Chamfer
4-#6
#4 @ 18"
2" Clear
3'-9"
Elev given to this line
Class A Cement Concrete Masonry
#5 @ 12"
Construction Joint
4" Weep Holes 10' o.c. just above footing
#5 as shown
#5 @ 12"
3" Clear
3'-9"
2'-0"
7'-3"

SECTION A-A

Scale: 1/4" = 1'-0"

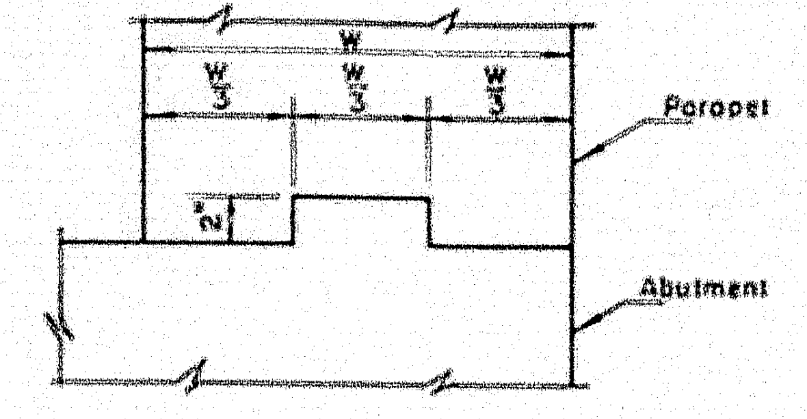
W
W/3
W/3
W/3
Parapet
Abutment
2"

DETAIL "C"

Scale: 1½" = 1'-0"

NOTES
1. Concrete in backwall not to be placed until structural steel has been erected
2. Construction joint to be at or above bridge seat elevation
3. Provide French Drains behind abutments & wingwalls
4. Highway gravel base to be continued under approach slab to meet French Drains
5. Embankment under abutments to be constructed to elevation of bottom of footing before piles are driven
6. All piles to be driven to bedrock or practical refusal
7. All piles in the abutments to be 12BP53 steel piles Maximum pile load 37 tons
8. ⌶ indicates pile battered 3 on 12 in direction of arrow
9. Cap all piles See detail Sheet 12
10. Approach Slab shall be paid for under Item 701-40 Portland Cement Concrete Roadway and Sidewalk Slabs on Steel Bridges
11. 3-ply Membrane Waterproofing and Bituminous Concrete Surfacing are not included in this Contract
12. Thoroughly coat sides & bottom of 4" drainage trough with bituminous damp-proofing

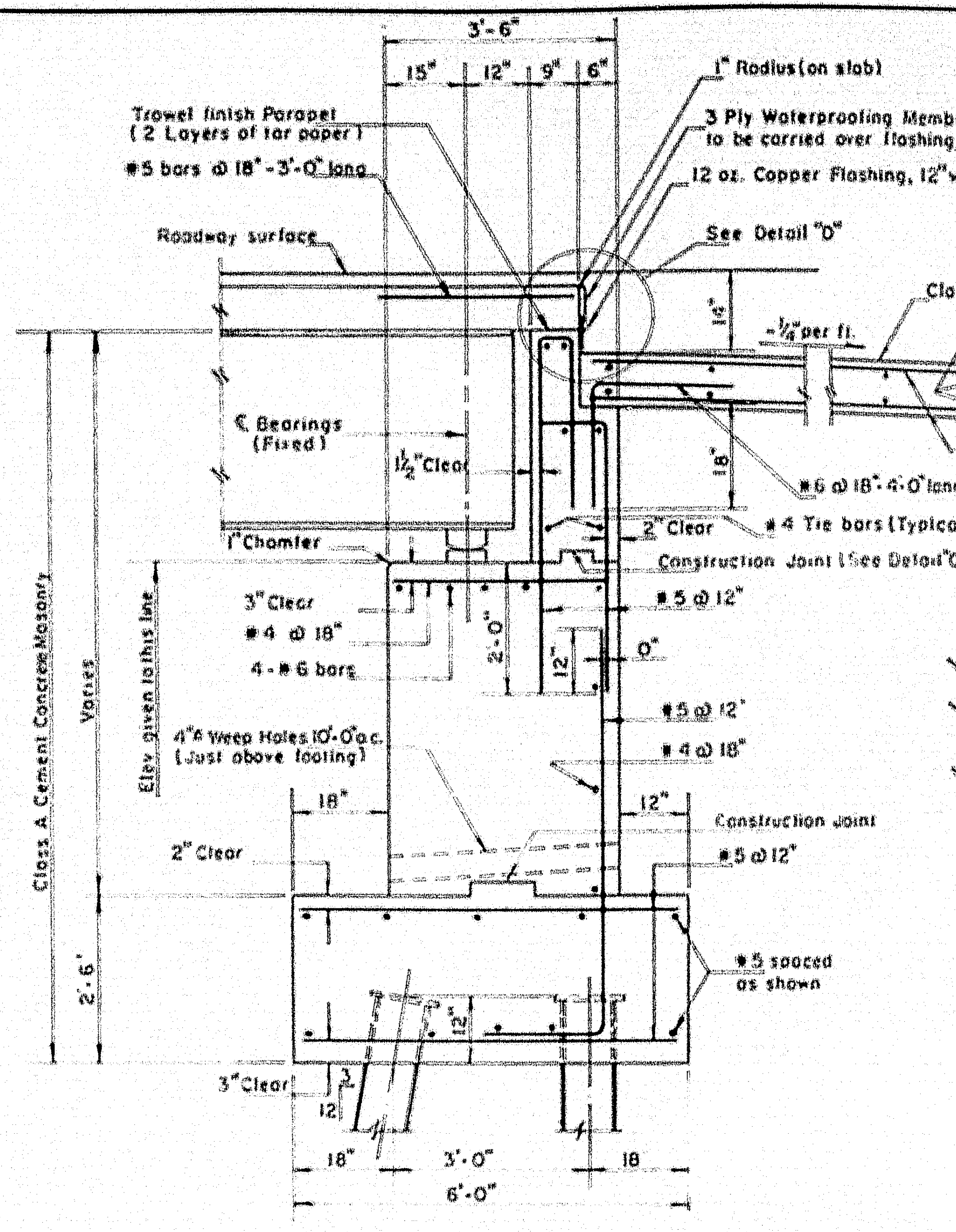
3'-6"
15"
12"
9"
6"
Trowel finish Parapet (2 Layers of tar paper)
#5 bars @ 18"-3'-0" long
1" Radius (on slab)
3 Ply Waterproofing Membrane to be carried over flashing
12 oz. Copper Flashing, 12" wide
Roadway surface
See Detail "D"
Class A Cement Concrete Masonry
#4 @ 18" T&B Parallel to ℄ Bearings
-¼" per ft.
10"
#7 @ 6" T&B parallel to ℄ Construction
℄ Bearings (Fixed)
1½" Clear
#6 @ 18"-4'-0" long
#4 Tie bars (Typical)
2" Clear
1" Chamfer
Construction Joint (See Detail "C")
3" Clear
#4 @ 18"
4-#6 bars
#5 @ 12"
#5 @ 12"
#4 @ 18"
4" Weep Holes 10'-0" o.c. (Just above footing)
Elev given to this line
Varies
18"
12"
2" Clear
Construction Joint
#5 @ 12"
#5 spaced as shown
2'-6"
3" Clear
18"
3'-0"
18"
6'-0"

TYPICAL SECTION EASTERLY ABUTMENTS

Scale: ½" = 1'-0"

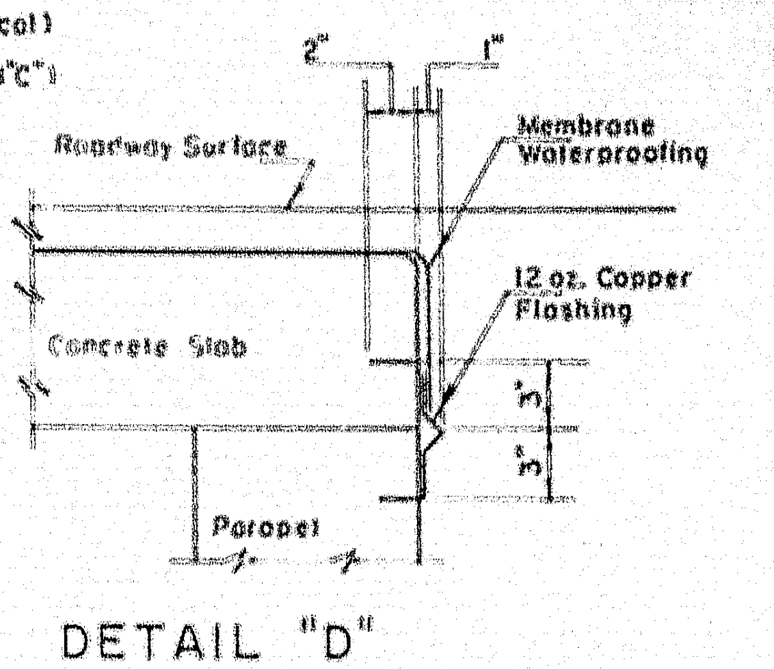
2"
1"
Roadway Surface
Membrane Waterproofing
12 oz. Copper Flashing
Concrete Slab
3"
Parapet

DETAIL "D"

Scale: 1½" = 1'-0"

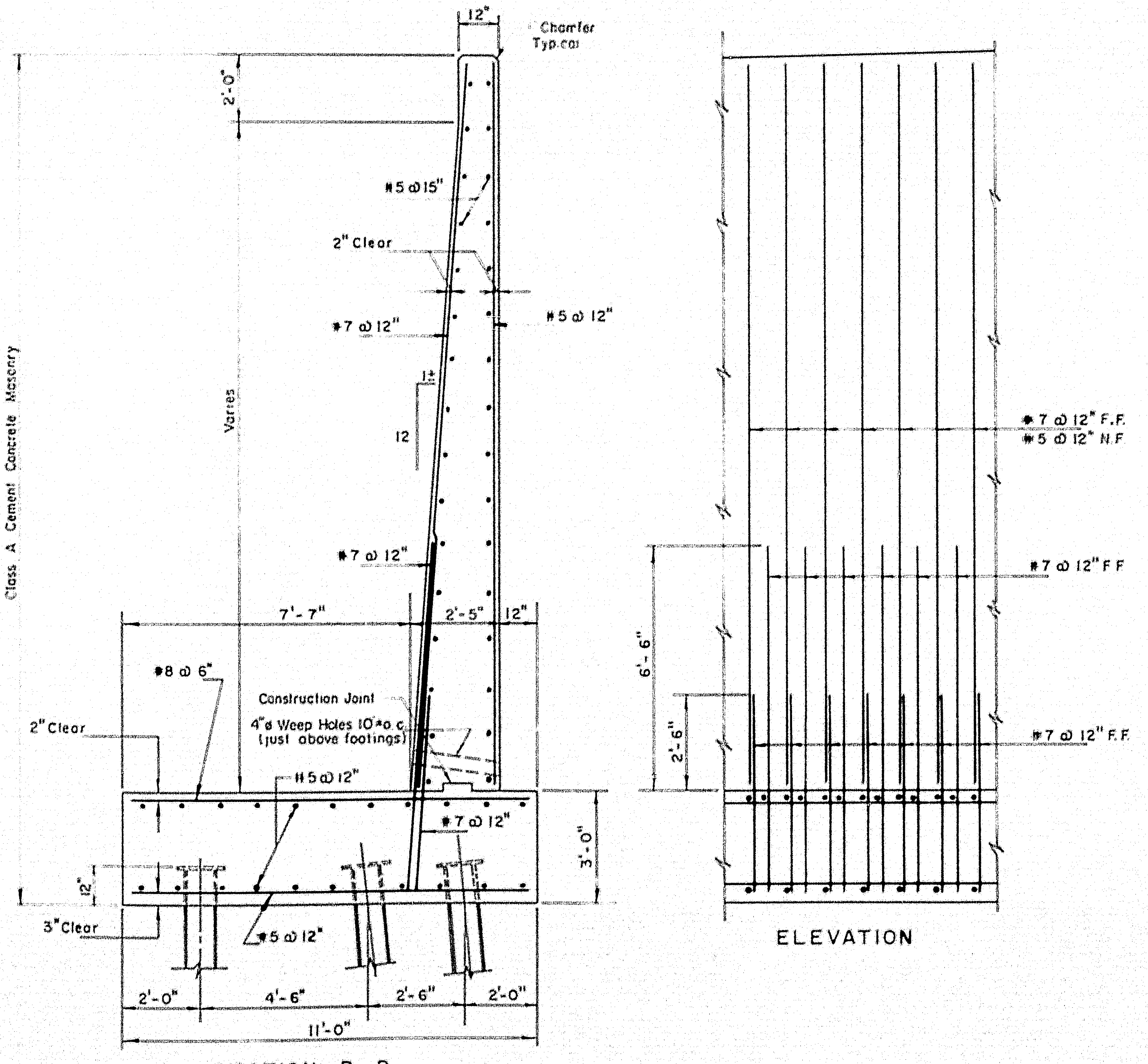
12"
Chamfer Typical
2'-0"
#5 @ 15"
2" Clear
#5 @ 12"
#7 @ 12"
Varies
Class A Cement Concrete Masonry
#7 @ 12"
7'-7"
2'-5"
12"
#8 @ 6"
2" Clear
Construction Joint
4" Weep Holes 10' o.c. (just above footings)
#5 @ 12"
#7 @ 12"
3'-0"
3" Clear
#5 @ 12"
2'-0"
4'-6"
2'-6"
2'-0"
11'-0"
#7 @ 12" F.F.
#5 @ 12" N.F.
#7 @ 12" F.F.
6'-6"
2'-6"
#7 @ 12" F.F.

SECTION B-B

ELEVATION

WING REINFORCING LAYOUT (WESTERLY ABUTMENTS)

Scale: 3/8" = 1'-0"

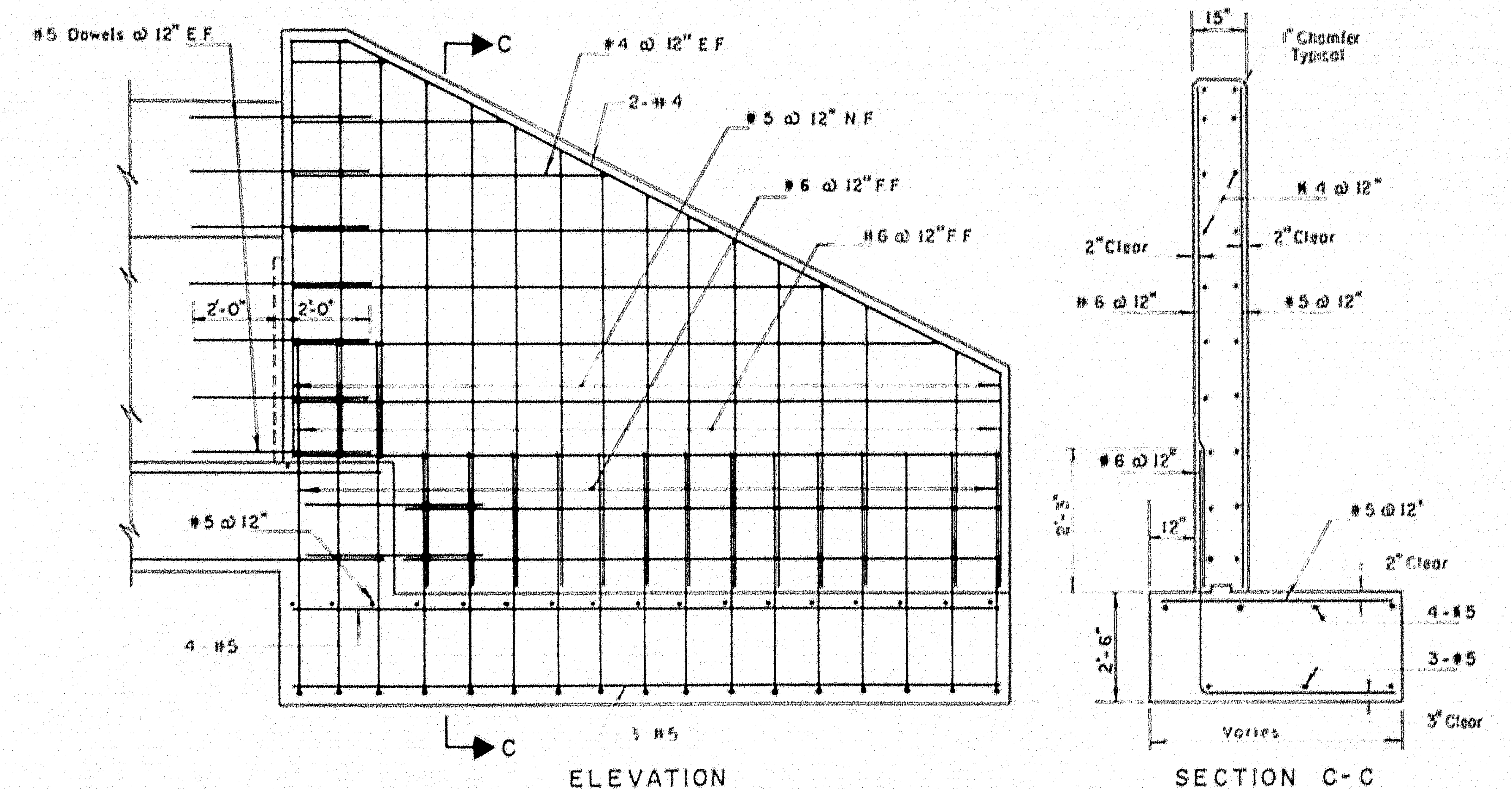
#5 Dowels @ 12" E.F.
C
#4 @ 12" E.F.
2-#4
#5 @ 12" N.F.
#6 @ 12" F.F.
#6 @ 12" F.F.
2'-0"
2'-0"
#5 @ 12"
4-#5
3-#5
C
15"
1" Chamfer Typical
#4 @ 12"
2" Clear
2" Clear
#6 @ 12"
#5 @ 12"
#6 @ 12"
2'-3"
12"
#5 @ 12"
2" Clear
4-#5
3-#5
2'-6"
Varies
3" Clear

ELEVATION

SECTION C-C

WING REINFORCING LAYOUT (EASTERLY ABUTMENTS)

Scale: 3/8" = 1'-0"

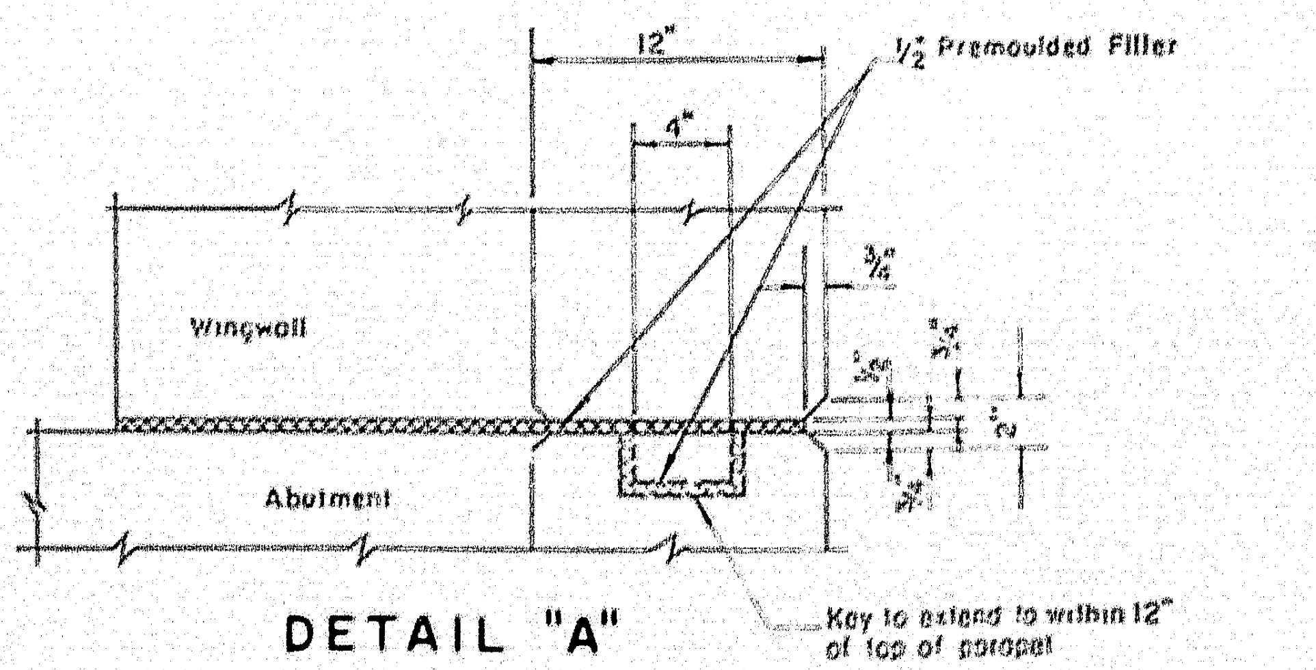
12"
4"
½" Premoulded Filler
¾"
Wingwall
Abutment
Key to extend to within 12" of top of parapet

DETAIL "A"

Scale: 1½" = 1'-0"

THE CLARKESON ENGINEERING CO., INC.

DESIGN J T	CHECK J. V.	BRIDGE NO
		SURVEY
DRAWN D E S	APPROVED V.A.H. B.C. J.V.	PLOT

STATE HIGHWAY COMMISSION
INTERSTATE #95
OVER
MESSALONSKEE STREAM
& QUARRY ROAD (RELOC.)
IN THE CITY OF
WATERVILLE
KENNEBEC COUNTY
ABUTMENTS

SHEET 11 OF 23 SHEETS
AUGUSTA, MAINE

78-183

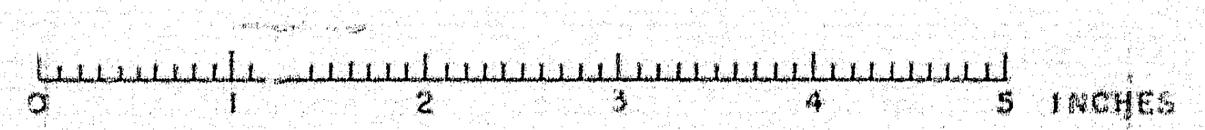
0
1
2
3
4
5
INCHES

B.P.R. REG. NO.	STATE	PROJECT NO.	SHEET NO.	TOTAL SHEETS
1	MAINE	I-95-6(23)	19	32

WATERVILLE INTERSTATE

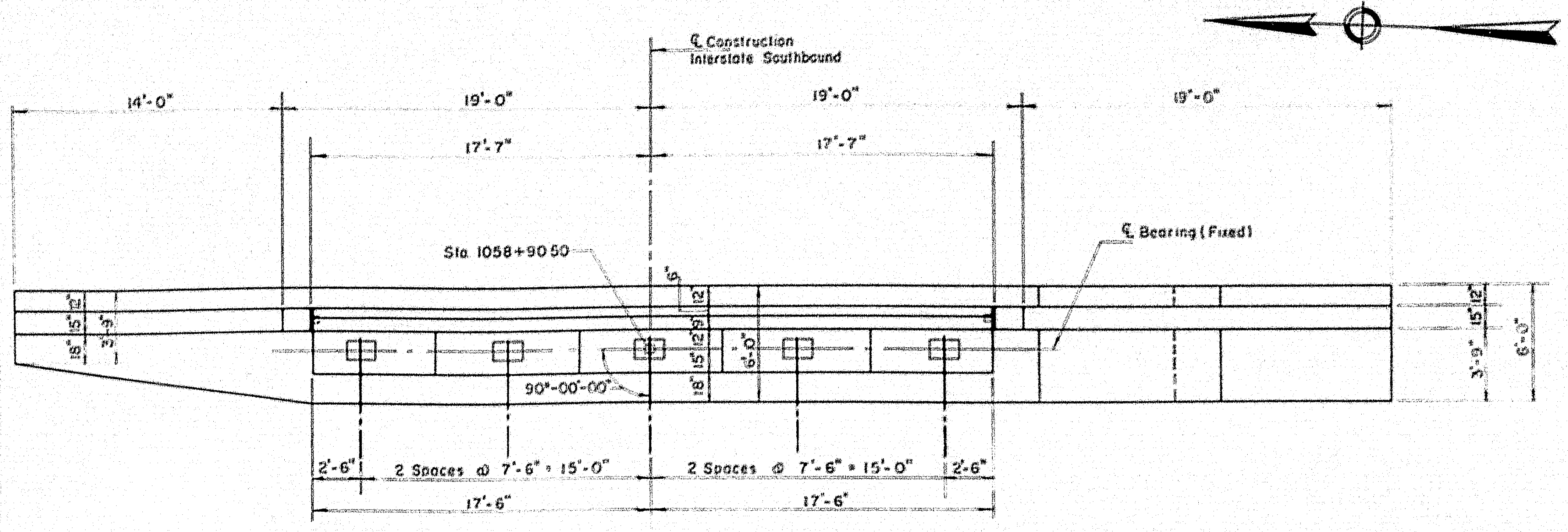
℄ Construction Interstate Southbound
14'-0"
19'-0"
19'-0"
19'-0"
17'-7"
17'-7"
Sta. 1058+90.50
℄ Bearing (Fixed)
90°-00'-00"
2'-6"
2 Spaces @ 7'-6" = 15'-0"
2 Spaces @ 7'-6" = 15'-0"
17'-6"
17'-6"
6'-0"
3'-9"

PLAN NORTHEASTERLY ABUTMENT

Scale: 3/16" = 1'-0"

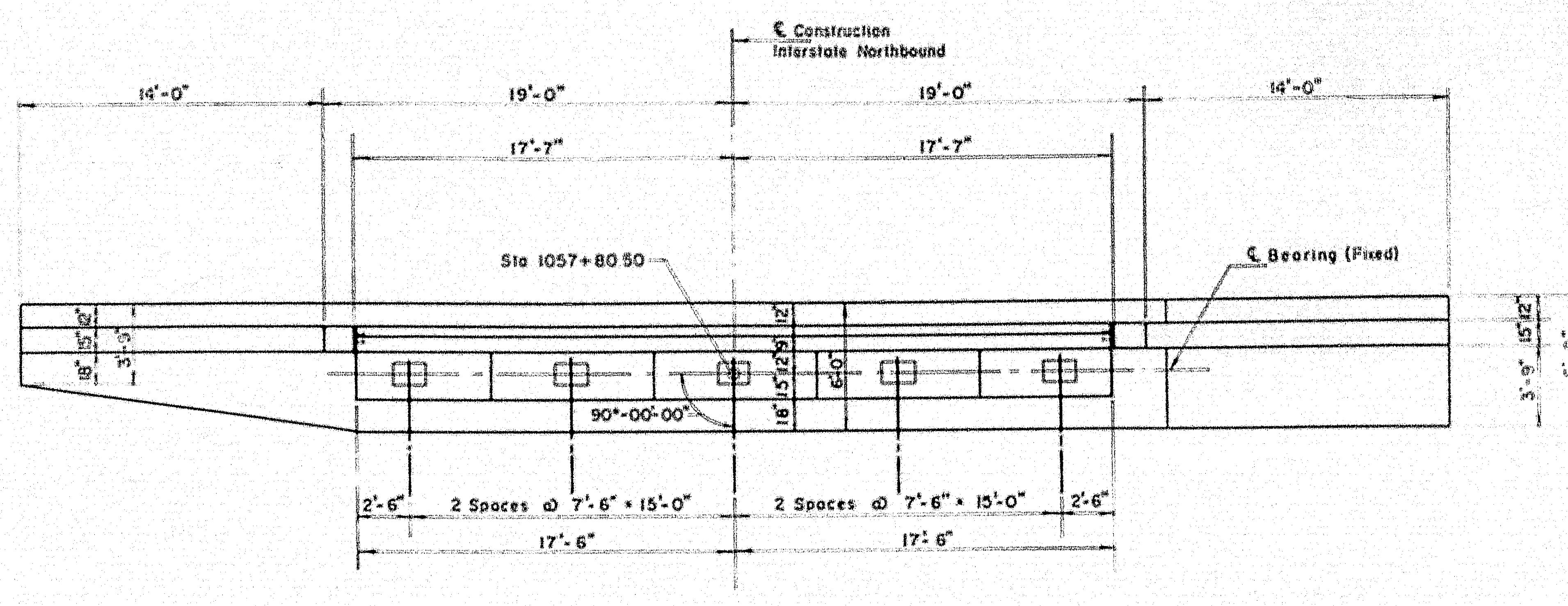
℄ Construction Interstate Northbound
14'-0"
19'-0"
19'-0"
14'-0"
17'-7"
17'-7"
Sta. 1057+80.50
℄ Bearing (Fixed)
90°-00'-00"
2'-6"
2 Spaces @ 7'-6" = 15'-0"
2 Spaces @ 7'-6" = 15'-0"
17'-6"
17'-6"
6'-0"
3'-9"

PLAN SOUTHEASTERLY ABUTMENT

Scale: 3/16" = 1'-0"

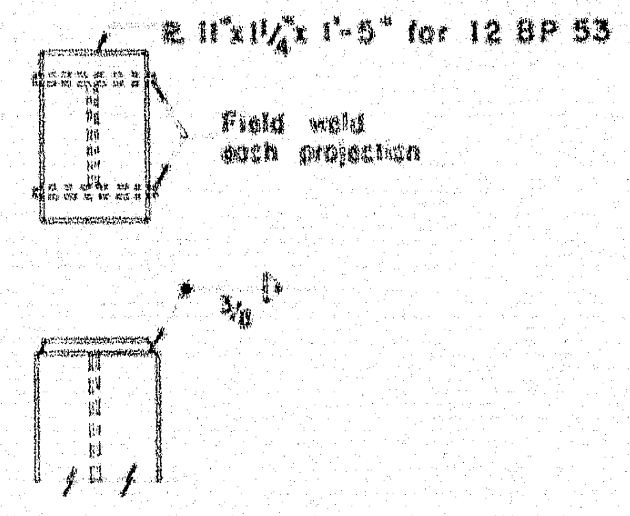
ℙ 11"x1¼"x 1'-5" for 12 BP 53
Field weld each projection
3/8

PILE CAP DETAIL

Scale 3/4" = 1'-0"

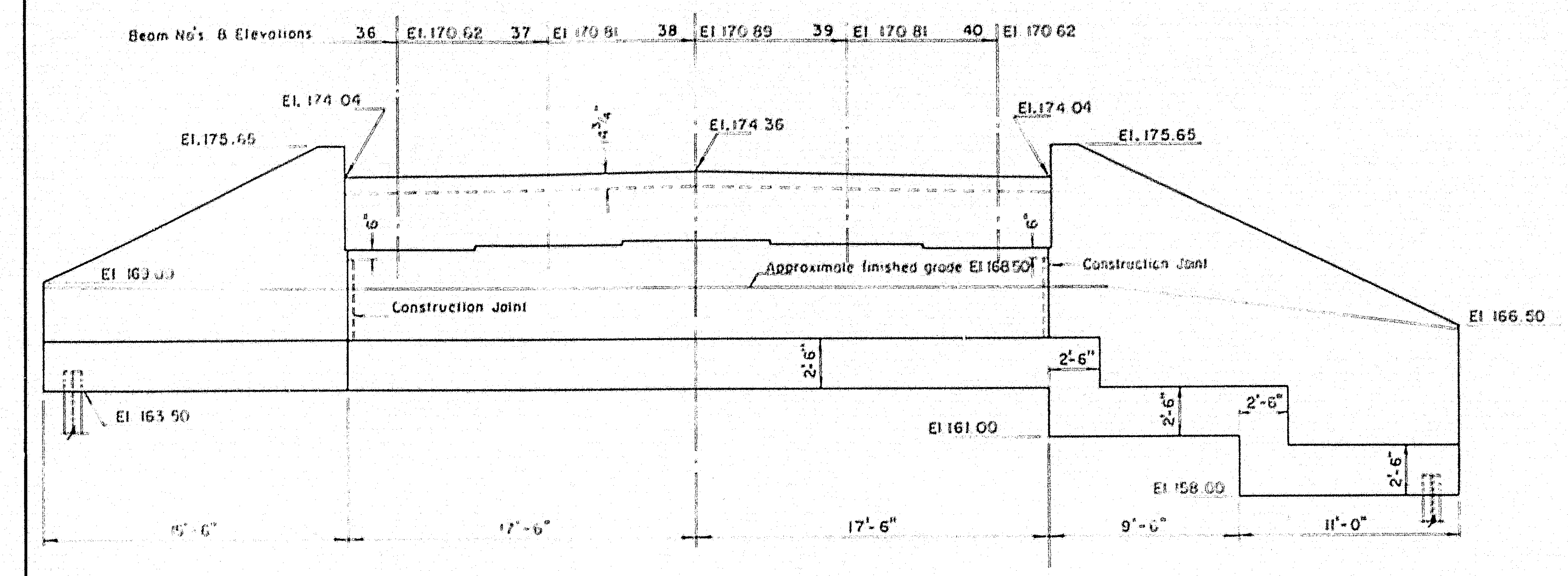
Beam No's. & Elevations
36 El. 170.62
37 El. 170.81
38 El. 170.89
39 El. 170.81
40 El. 170.62
El. 174.04
El. 175.65
El. 174.36
El. 174.04
El. 175.65
El. 169.00
Approximate finished grade El. 168.50
Construction Joint
Construction Joint
El. 166.50
El. 163.50
El. 161.00
El. 158.00
2'-6"
15'-6"
17'-6"
17'-6"
9'-0"
11'-0"

ELEVATION NORTHEASTERLY ABUTMENT

Scale 3/16" = 1'-0"

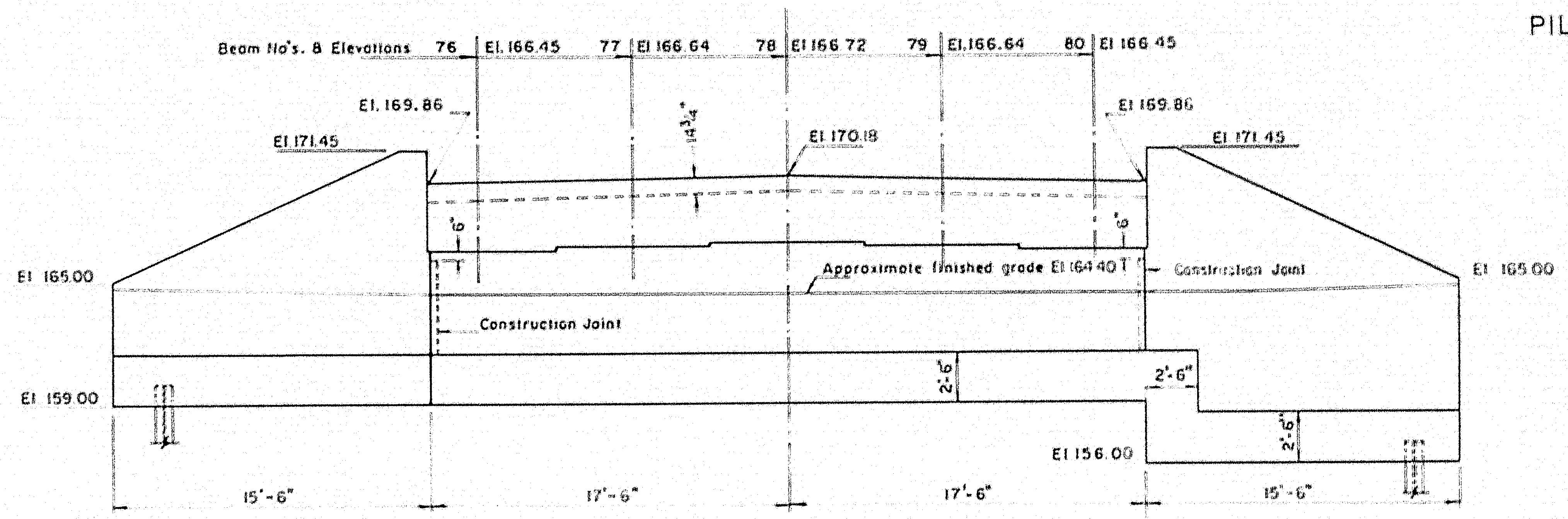
Beam No's. & Elevations
76 El. 166.45
77 El. 166.64
78 El. 166.72
79 El. 166.64
80 El. 166.45
El. 169.86
El. 171.45
El. 170.18
El. 169.86
El. 171.45
El. 165.00
Approximate finished grade El. 164.40
Construction Joint
Construction Joint
El. 165.00
El. 159.00
El. 156.00
2'-6"
15'-6"
17'-6"
17'-6"
15'-6"

ELEVATION SOUTHEASTERLY ABUTMENT

Scale 3/16" = 1'-0"

NOTES
1 For typical abutment section and wing section see Sheet 11
2 For general notes, sections and details see Sheet 11

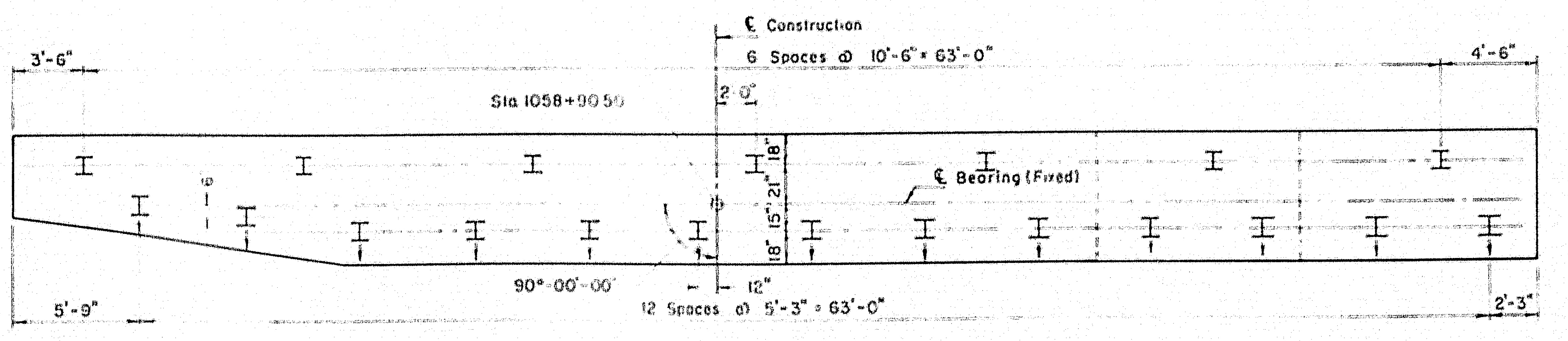
℄ Construction
6 Spaces @ 10'-6" = 63'-0"
3'-6"
4'-6"
Sta. 1058+90.50
2'-0"
℄ Bearing (Fixed)
90°-00'-00"
12"
12 Spaces @ 5'-3" = 63'-0"
5'-9"
2'-3"

20 piles required.

PILE PLAN NORTHEASTERLY ABUTMENT

Scale 3/16" = 1'-0"

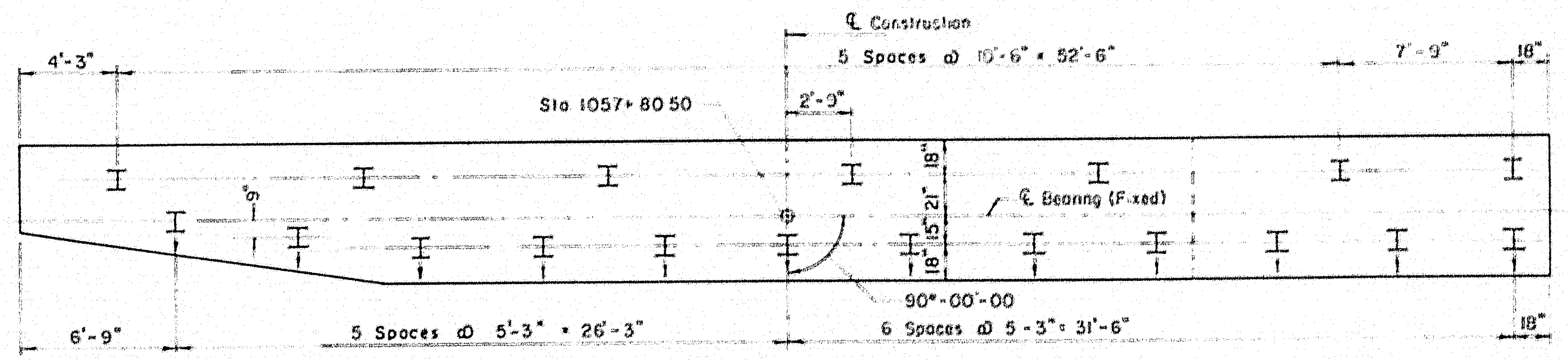
℄ Construction
5 Spaces @ 10'-6" = 52'-6"
4'-3"
7'-9"
18"
Sta. 1057+80.50
2'-9"
℄ Bearing (Fixed)
90°-00'-00
5 Spaces @ 5'-3" = 26'-3"
6 Spaces @ 5'-3" = 31'-6"
6'-9"
18"

19 piles required.

PILE PLAN SOUTHEASTERLY ABUTMENT

Scale: 3/16" = 1'-0"

THE CLARKESON ENGINEERING CO., INC.

DESIGN J.T	CHECK J.J.M	BRIDGE NO. SURVEY
DRAWN D.E.S	APPRO. DWAH & CJM	PLCT

STATE HIGHWAY COMMISSION
INTERSTATE #95
OVER
MESSALONSKEE STREAM
& QUARRY ROAD (RELOC.)
IN THE CITY OF
WATERVILLE
KENNEBEC COUNTY
NORTHEASTERLY & SOUTHEASTERLY
ABUTMENTS
SHEET 12 OF 23 SHEETS AUGUSTA, MAINE

78-184

K•E PHOENIX BLUE 165

0 1 2 3 4 5 INCHES

F.P.R. REG NO	STATE	PROJECT NO.	SHEET NO	TOTAL SHEETS
1	MAINE	I-95-6(23)	20	32

WATERVILLE INTERSTATE

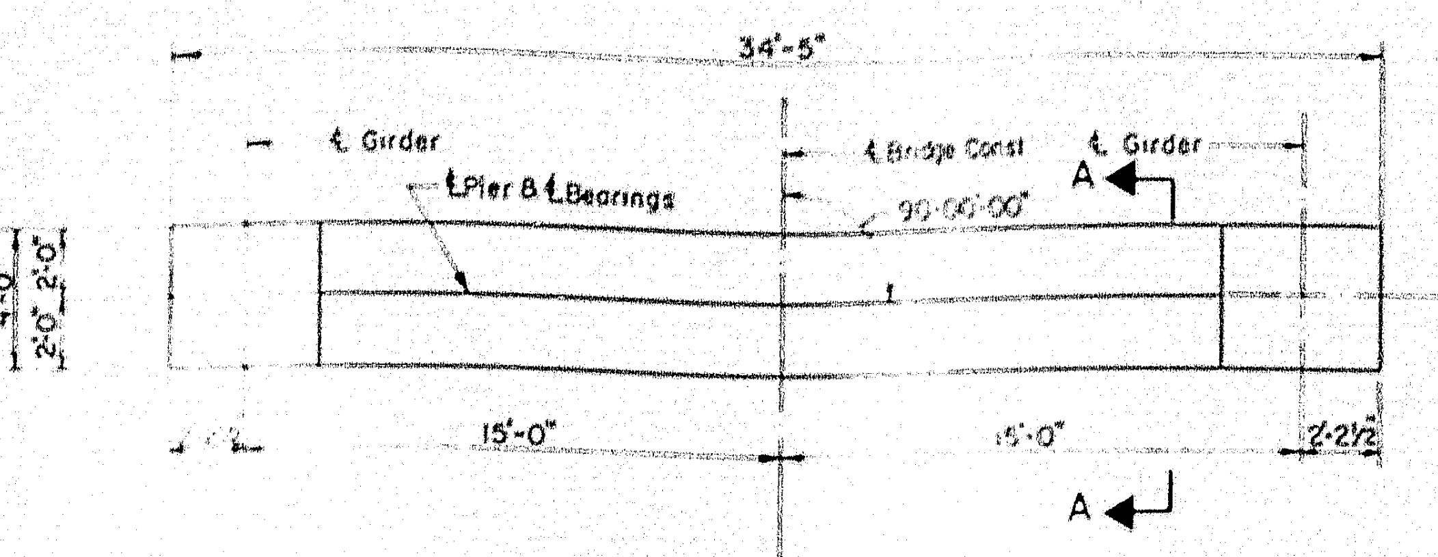
34'-5"
℄ Girder
℄ Pier & ℄ Bearings
℄ Bridge Const.
℄ Girder
90°00'00"
A
4'-0"
2'-0" 2'-0"
15'-0"
15'-0"
2'-2½
A

PLAN PIERS A,B,L & M
Scale 3/16" = 1'-0"

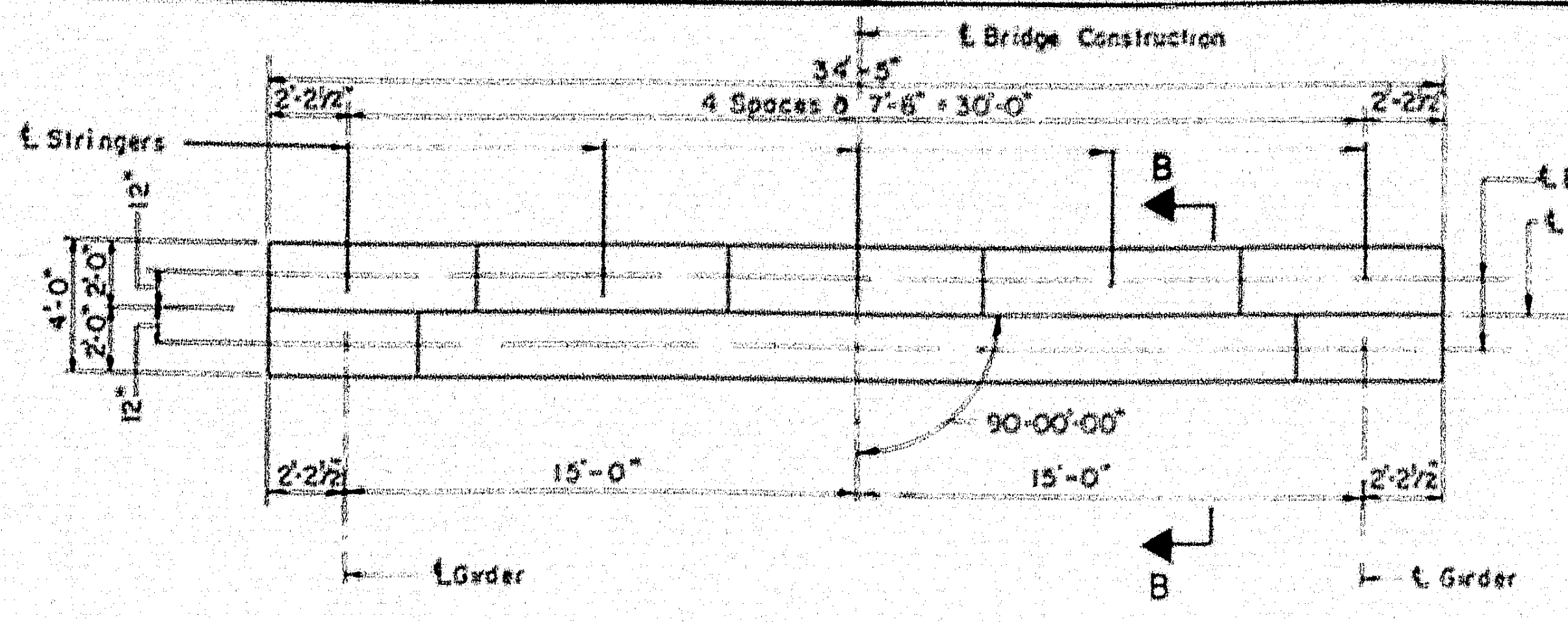
℄ Bridge Construction
34'-5"
2'-2½
4 Spaces @ 7'-6" = 30'-0"
℄ Stringers
B
℄ Bearings
℄ Pier
4'-0"
2'-0" 2'-0"
90°-00'-00"
15'-0"
15'-0"
℄ Girder
B
℄ Girder

PLAN PIERS C & N
Scale 3/16" = 1'-0"

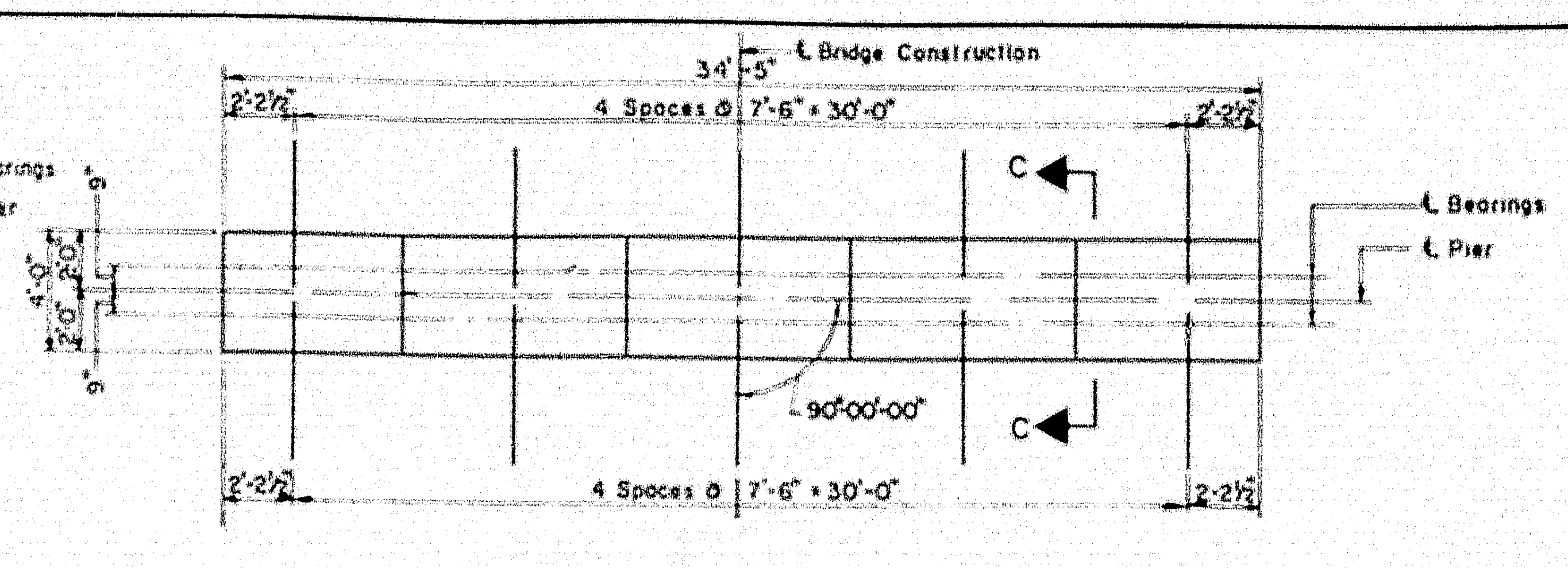
℄ Bridge Construction
34'-5"
2'-2½
4 Spaces @ 7'-6" = 30'-0"
C
℄ Bearings
℄ Pier
90°-00'-00"
C
4 Spaces @ 7'-6" = 30'-0"

PLAN PIERS D thru K & O thru U
Scale 3/16" = 1'-0"

NORTHBOUND			SOUTHBOUND		
PIER	Elevation Top of Col.	Elevation Bott of Ftg.	PIER	Elevation Top of Col.	Elevation Bott of Ftg
L	138 67	94.00	A	140.20	94.00
M	138.11	83.50	B	139 83	83.00
N	140.38	75 00	C	142 28	75.00
O	144 82	93.00	D	146.92	97.00
P	145 59	113.00	E	[illegible]	[illegible]
Q	146.60	115.00	F	[illegible]	[illegible]
R	147.99	113.00	G	[illegible]	[illegible]
S	149.62	128.00	H	[illegible]	[illegible]
T	151.63	130.00	J	[illegible]	[illegible]
U	153.88	145.00	K	[illegible]	[illegible]

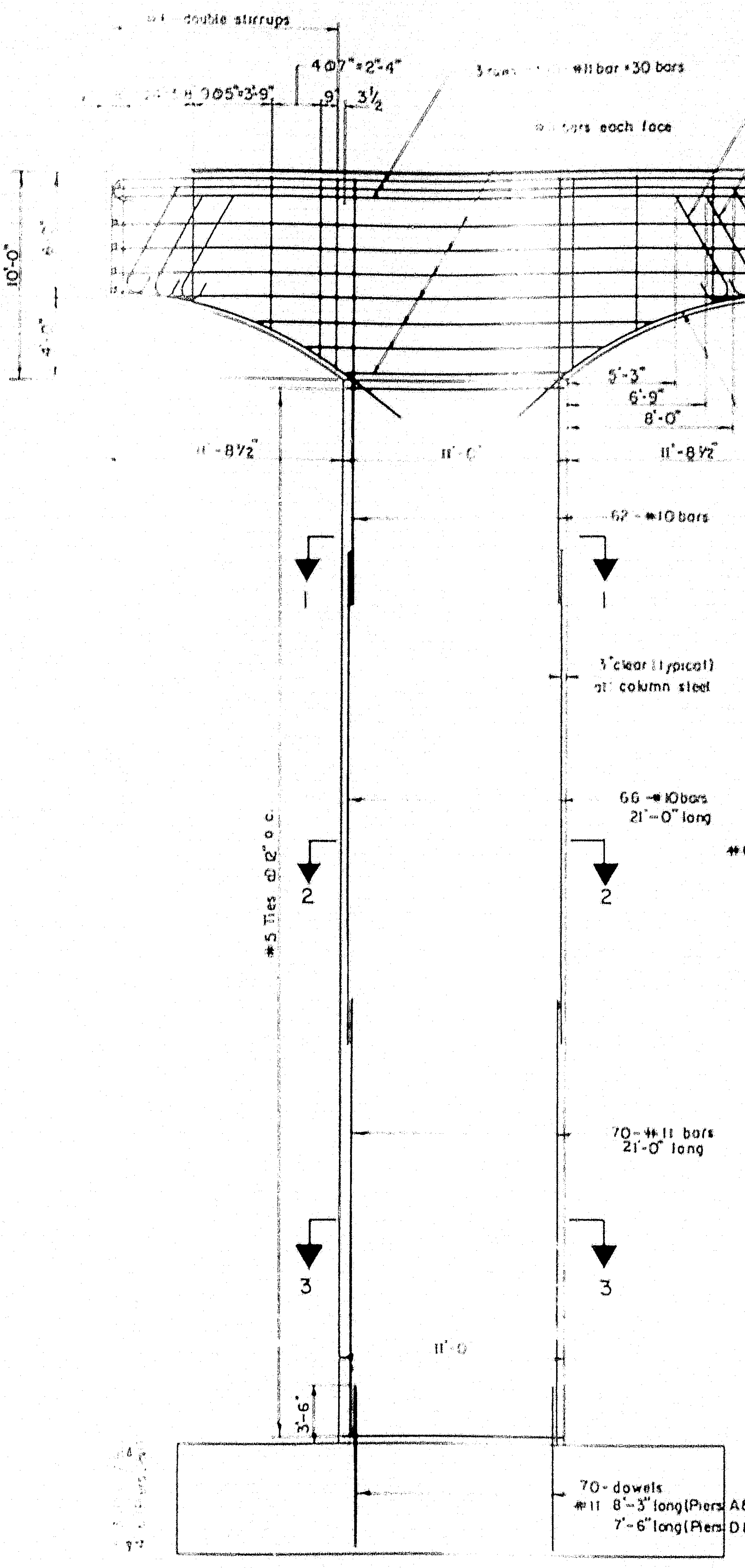
#4 double stirrups
4 @ 7" = 2'-4"
3½
#11 bar = 30 bars
bars each face
22,24,27 & 29
23,25,26 & 28
12,14,17 & 19
10'-0"
5-#6 bars each end
5'-3"
6'-9"
8'-0"
11'-8½"
11'-0"
11'-8½"
7-#11 bars
62-#10 bars
3" clear (typical) at column steel
66-#10 bars 21'-0" long
#5 Ties @ 12" o.c.
70-#11 bars 21'-0" long
1
2
3
11'-0
3'-6"
70-dowels #11 8'-3" long (Piers A & L) 7'-6" long (Piers D & O)

ELEVATION PIERS A & L
PIERS D & O SIMILAR (except cap reinforcement)
Scale: 3/16" = 1'-0"

Note: For piers D and O cap reinforcement see elevation piers E, F, G etc.

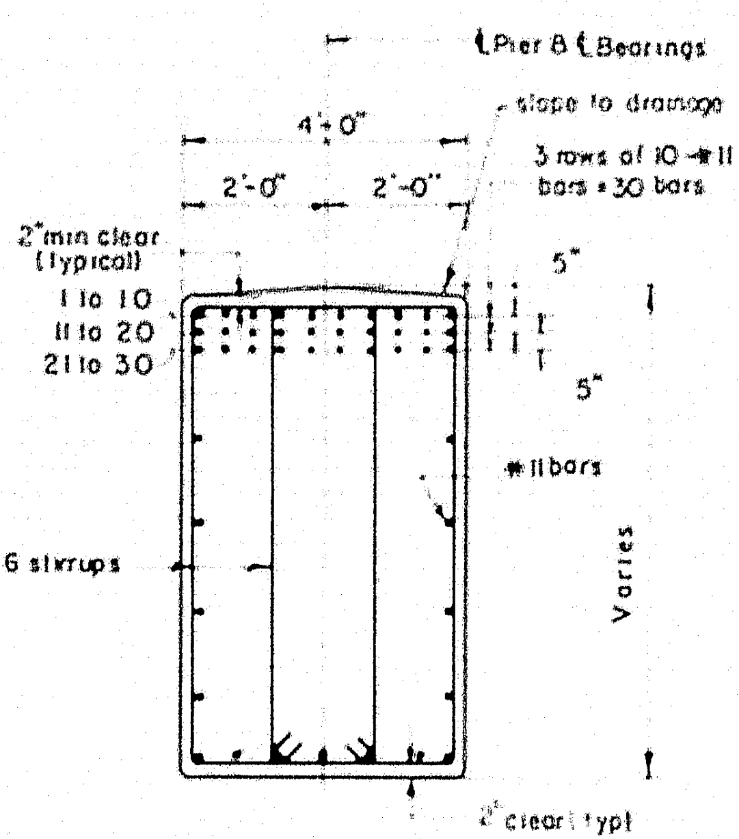
℄ Pier & ℄ Bearings
4'-0"
2'-0" 2'-0"
slope to drainage
3 rows of 10-#11 bars = 30 bars
2" min clear (typical)
1 to 10
11 to 20
21 to 30
5"
5"
#11 bars
#6 stirrups
Varies
2" clear (typ)

SECTION A-A
Scale 3/8" = 1'-0"

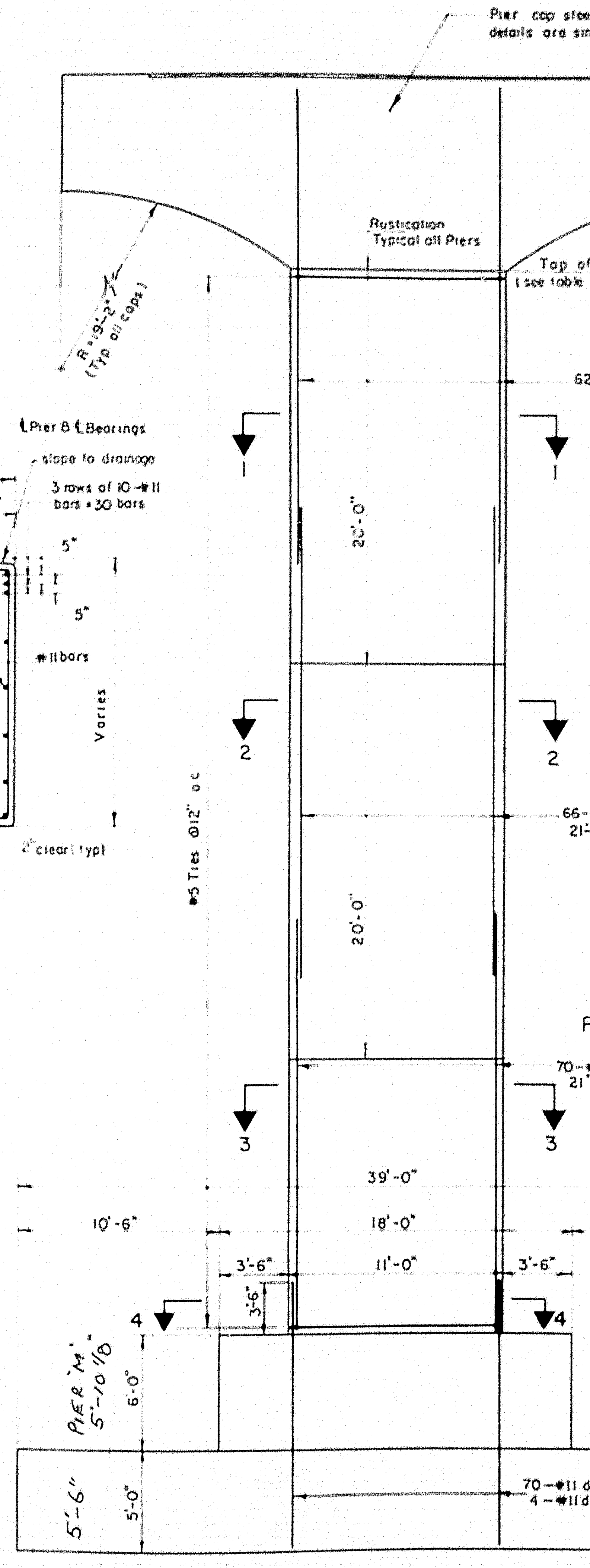
Pier cap steel reinforcement details are similar to pier A & L
R = 9'-2½" (Typ all caps)
Rustication Typical all Piers
Top of column (see table for elevations)
62-#10 bars
66-#10 bars 21'-0" long
70-#11 bars 21'-0" long
#5 Ties @ 12" o.c.
20'-0"
20'-0"
1
2
3
39'-0"
18'-0"
11'-0"
10'-6"
10'-6"
3'-6"
3'-6"
4
4
PIER 'M' 5'-10½"
6'-0"
5'-6"
5'-0"
70-#11 dowel 14'-0" long
4-#11 dowels 19'-6" long
PIER C,B,M,N

ELEVATION PIERS B & M
ELEVATIONS PIERS C & N SIMILAR (except pier cap)
Scale 3/16" = 1'-0"

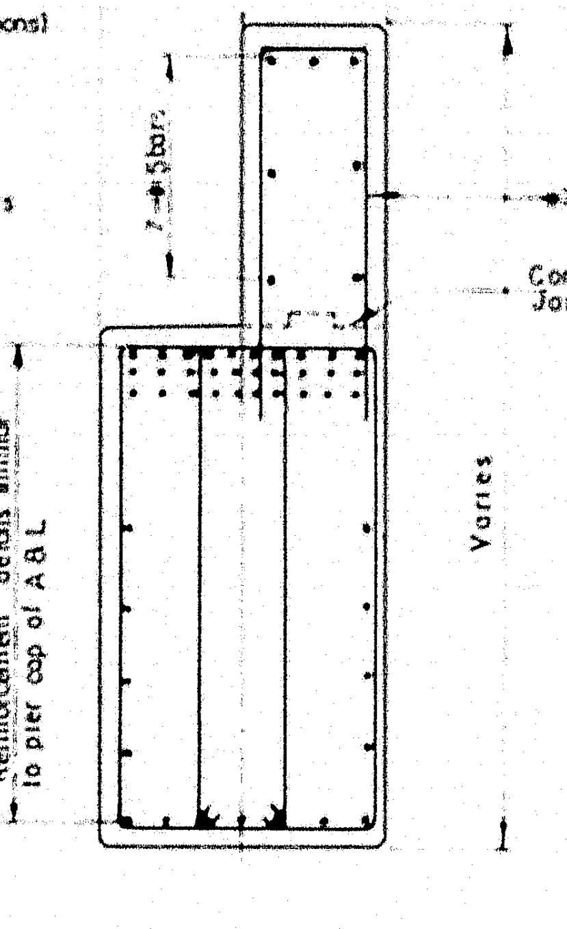
℄ Pier
4'-0"
2'-0" 2'-0"
7-#5 bars
7 bars @ 5
Construction Joint
#5 Ties @ 12" o.c.
4'-0" piers K, S, U
4'-6" piers J & T
Reinforcement details similar to pier cap of A & L
Varies

SECTION B-B
Scale 3/8" = 1'-0"

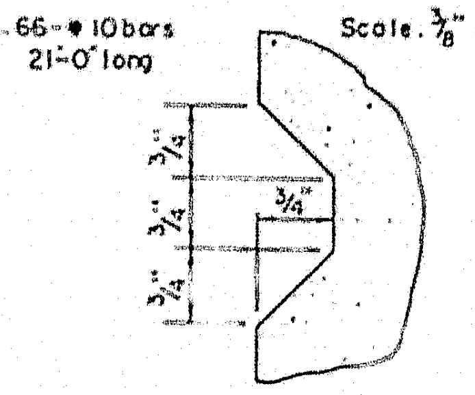

PIER COLUMN RUSTICATION
Scale: half size

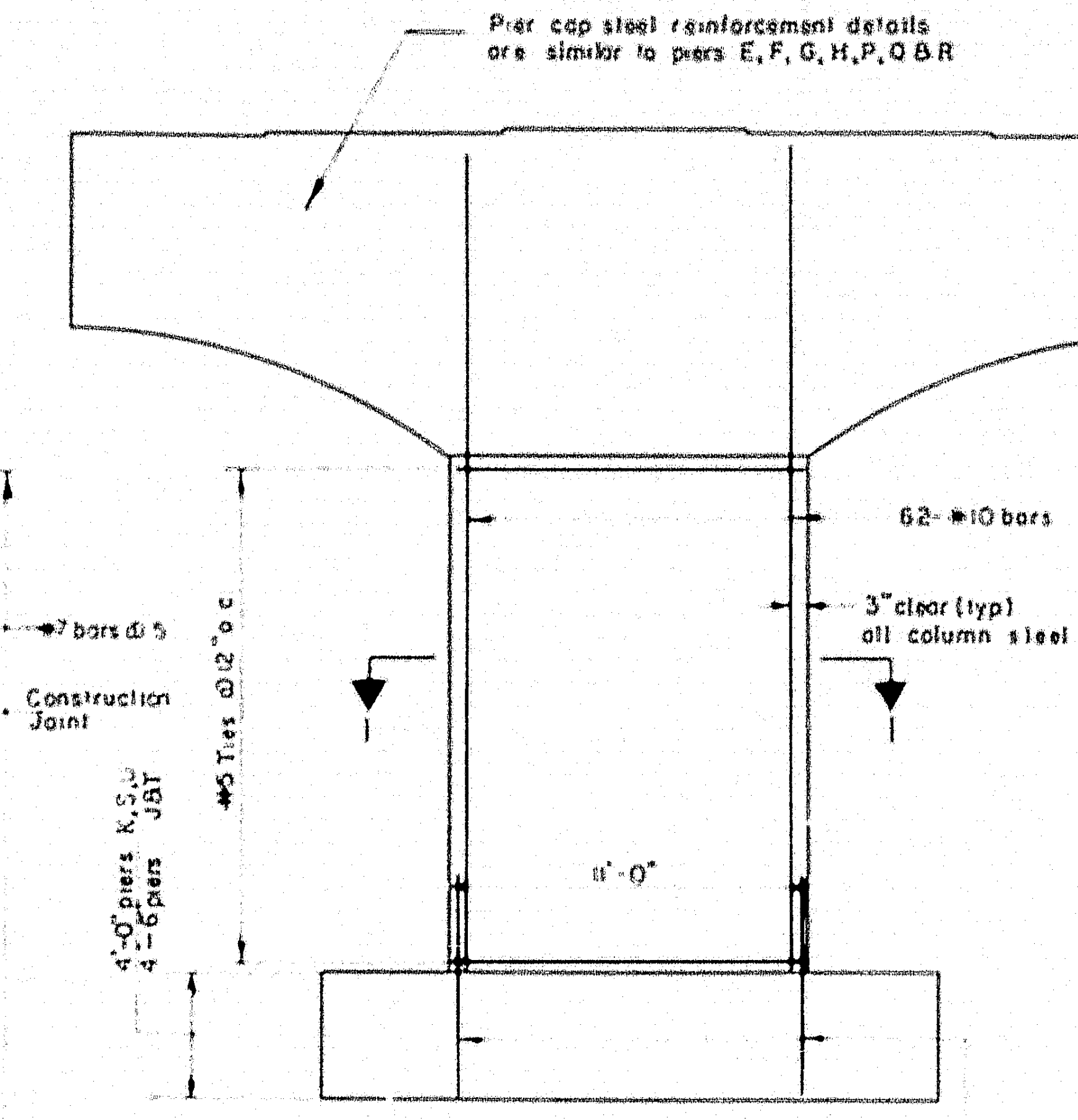
Pier cap steel reinforcement details are similar to piers E, F, G, H, P, Q & R
62-#10 bars
3" clear (typ) all column steel
11'-0"
1
1

ELEVATION PIERS J,K,S,T & U
Scale 3/16" = 1'-0"

62-#10 dowels 6'-6" long piers K, S, U
7'-0" long piers J & T

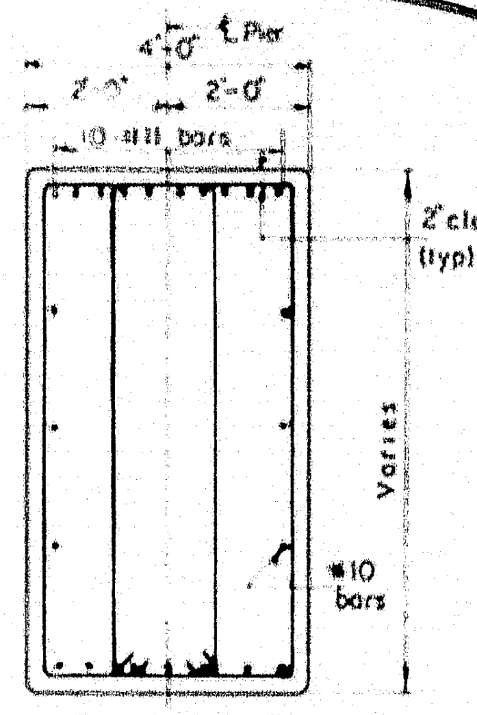
℄ Pier
2'-0" 2'-0"
10-#11 bars
2" clear (typ)
#10 bars
Varies

SECTION C-C
Scale 3/8" = 1'-0"

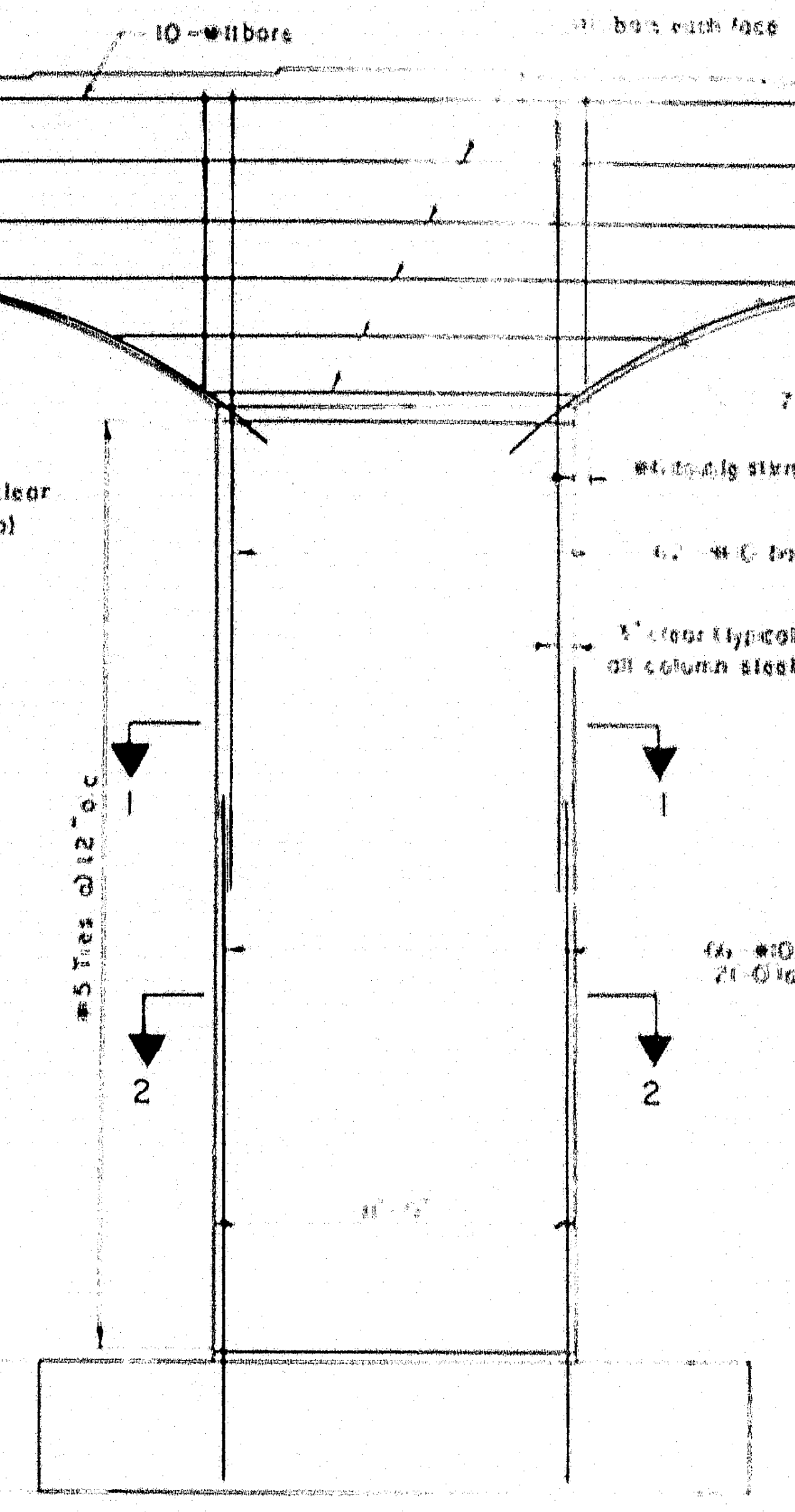
10-#11 bars
bars each face
5-#6 bars each end
7-#11 bars
#4 double stirrups @ 12"
62-#10 bars
3" clear (typical) all column steel
#5 Ties @ 12" o.c.
66-#10 bars 21'-0" long
1
1
2
2
4'-0" (pier E, F, G, P, Q & R)
4'-6" (pier H)

ELEVATION PIERS E, F, G, H, P, Q & R
Scale 3/16" = 1'-0"

SCHEDULE OF BEAM SEAT ELEVATIONS

Gr No	PIER A	PIER B	Gr No	PIER C		Bm No	PIER D		Bm No	PIER E		Bm No
1	150 20	149 83	5	152 28	156 35	1	156 92	156 93	6	157 90	157.92	11
					156 54	2	157 11	157 12	7	158 09	158 11	12
					156.62	3	157 19	157 20	8	158 17	158 19	13
					156.54	4	157 11	157 12	9	158 09	158 11	14
2	150.20	149.83	6	152 28	156.35	5	156 92	156 93	10	157 90	157 92	15

Bm No	PIER F		Bm No	PIER G		Bm No	PIER H		Bm No	PIER J		Bm No	PIER K		Bm No
11	159 15	159 18	16	160 81	160 84	21	162 73	162 77	26	165 06	165 10	31	167.66	167 71	36
12	159.34	159.37	17	161 00	161 03	22	162 92	162.96	27	165 25	165 29	32	167 85	167 90	37
13	159 42	159 45	18	161 08	161 11	23	163 00	163 04	28	165 33	165 37	33	167 93	167 98	38
14	159 34	159 37	19	161 00	161 03	24	162.92	162 96	29	165 25	165 29	34	167 85	167 90	39
15	159 15	159 18	20	160 81	160 84	25	162 73	162 77	30	165 06	165 10	35	167 66	167 71	40

Gr No	PIER L	PIER M	Gr No	PIER N		Bm No	PIER O		Bm No	PIER P		Bm No
7	148 68	148 11	11	150 38	154.44	41	154.82	154.83	46	155 59	155 60	51
					154.63	42	155 01	155 02	47	155 78	155 79	52
					154.71	43	155 09	155 10	48	155 86	155 87	53
					154.63	44	155.01	155 02	49	155 78	155 79	54
8	148.68	148 11	12	150.38	154 .44	45	154 82	154 83	50	155 59	155 60	55

Bm No	PIER Q		Bm No	PIER R		Bm No	PIER S		Bm No	PIER T		Bm No	PIER U		Bm No
51	156 60	156.62	56	157 99	158 01	61	159.62	159.65	66	161.63	161.67	71	163 88	163 93	76
52	156 79	156 81	57	158 18	158 20	62	159 81	159.84	67	161 82	161.86	72	164 07	164 12	77
53	156 87	156 89	58	158 26	158.28	63	159.89	159 92	68	161.90	161.94	73	164.15	164.20	78
54	156 79	156.81	59	158.18	158 20	64	159.81	159 84	69	161.82	161.86	74	164 07	164 12	79
55	156.60	156 62	60	157 99	158.01	65	159.62	159 65	70	161 63	161.67	75	163.88	163 93	80

NOTES
1. For beam numbers at piers see [illegible] sheet [illegible]
2. For footing sizes and pile [illegible] see sheet 14
3. For numbered sections see sheet 14
4. Lap for steel reinforcement is [illegible] except as noted.
5. Pier steel is symmetrical about center line of pier
6. Where necessary, construction joints in pier columns are to be located at rustications
7. All concrete in Piers to be [illegible]

THE CLARKESON ENGINEERING CO., INC.

DESIGN M.N.P	CHECK R.F.	BRIDGE & SURVEY DIVISION
DRAWN EK-DAT	APPROVED WAH-CJM	

STATE HIGHWAY COMMISSION
INTERSTATE #95
OVER
MESSALONSKEE STREAM
& QUARRY ROAD (RELOC.)
IN THE CITY OF
WATERVILLE
KENNEBEC COUNTY
PIERS

SHEET 13 OF 23 SHEETS
AUGUSTA, MAINE

78-185

B.P.R. REG. NO	STATE	PROJECT NO.	SHEET NO.	TOTAL SHEETS
1	MAINE	I-95-6(23)	21	32

WATERVILLE INTERSTATE

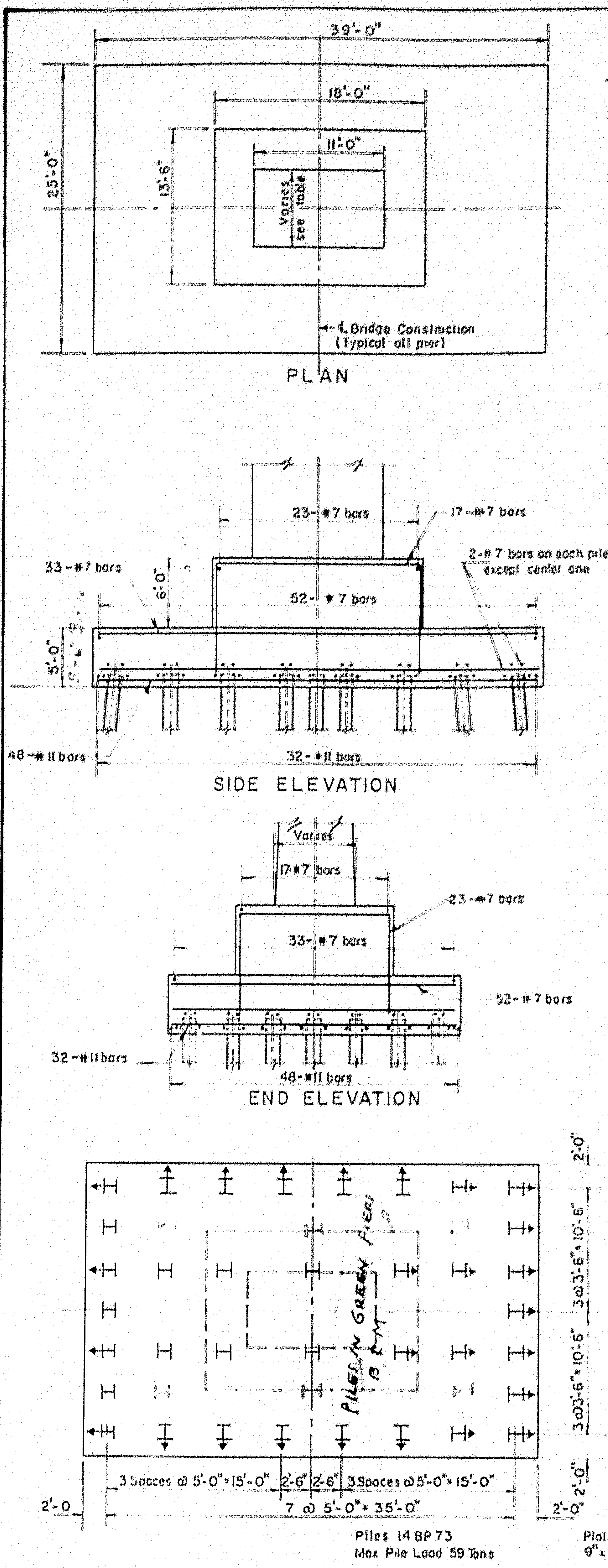
39'-0"
18'-0"
11'-0"
25'-0"
13'-6"
Varies see table
℄ Bridge Construction (Typical all pier)
PLAN
23-#7 bars
17-#7 bars
2-#7 bars on each pile row except center one
33-#7 bars
52-#7 bars
6'-0"
5'-0"
48-#11 bars
32-#11 bars
SIDE ELEVATION
Varies
17-#7 bars
23-#7 bars
33-#7 bars
52-#7 bars
32-#11 bars
48-#11 bars
END ELEVATION
PILES IN GREEN PIER 13 RM
3 Spaces @ 5'-0" = 15'-0"
2'-6"
2'-6"
3 Spaces @ 5'-0" = 15'-0"
7 @ 5'-0" = 35'-0"
2'-0
2'-0"
3@3'-6" = 10'-6"
3@3'-6" = 10'-6"
Piles 14BP73
Max Pile Load 59 Tons

PILE PLAN

PIERS B,C,M&N

Scale: 1/8" = 1'-0"

PIER N ADDITIONAL PILES 14 BP 89

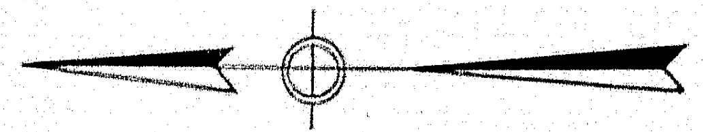

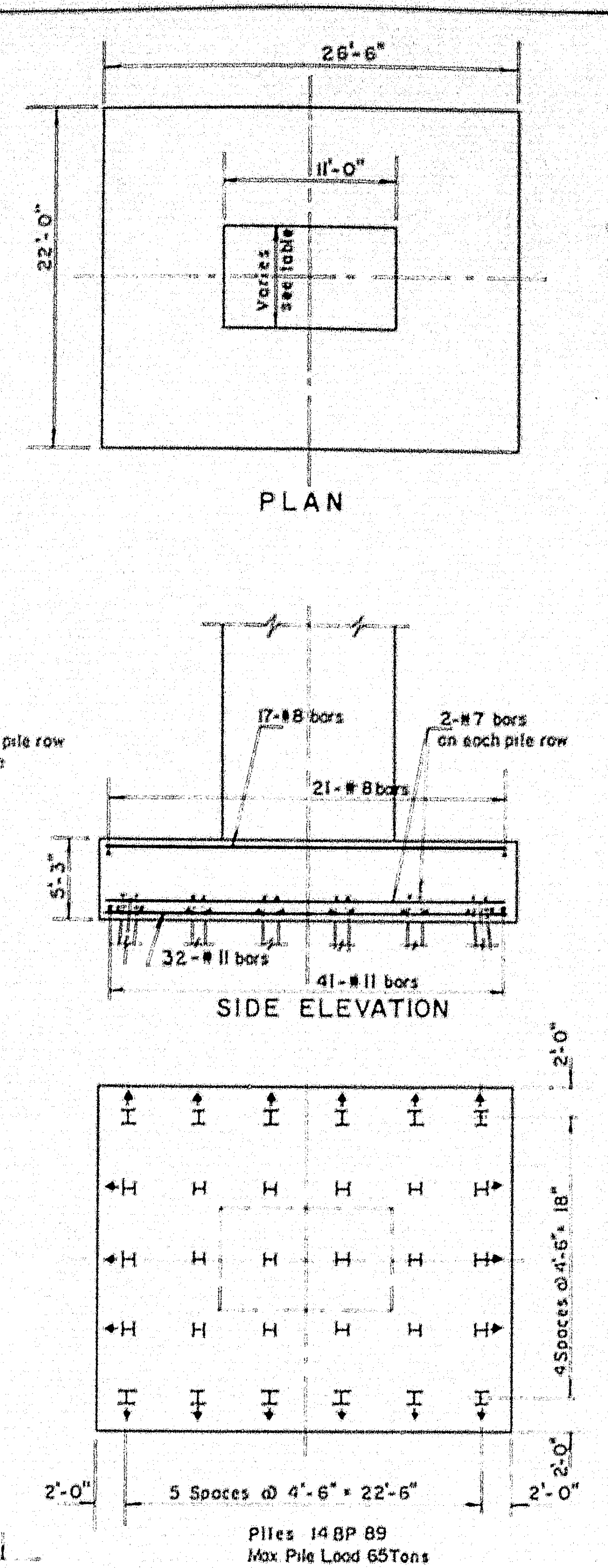
26'-6"
11'-0"
22'-0"
Varies see table
PLAN
17-#8 bars
2-#7 bars on each pile row
21-#8 bars
5'-3"
32-#11 bars
41-#11 bars
SIDE ELEVATION
2'-0"
4 Spaces @ 4'-6" = 18'
2'-0"
2'-0"
5 Spaces @ 4'-6" = 22'-6"
2'-0"
Piles 14BP89
Max Pile Load 65 Tons

PILE PLAN

PIERS A & L

Scale 1/8" = 1'-0"

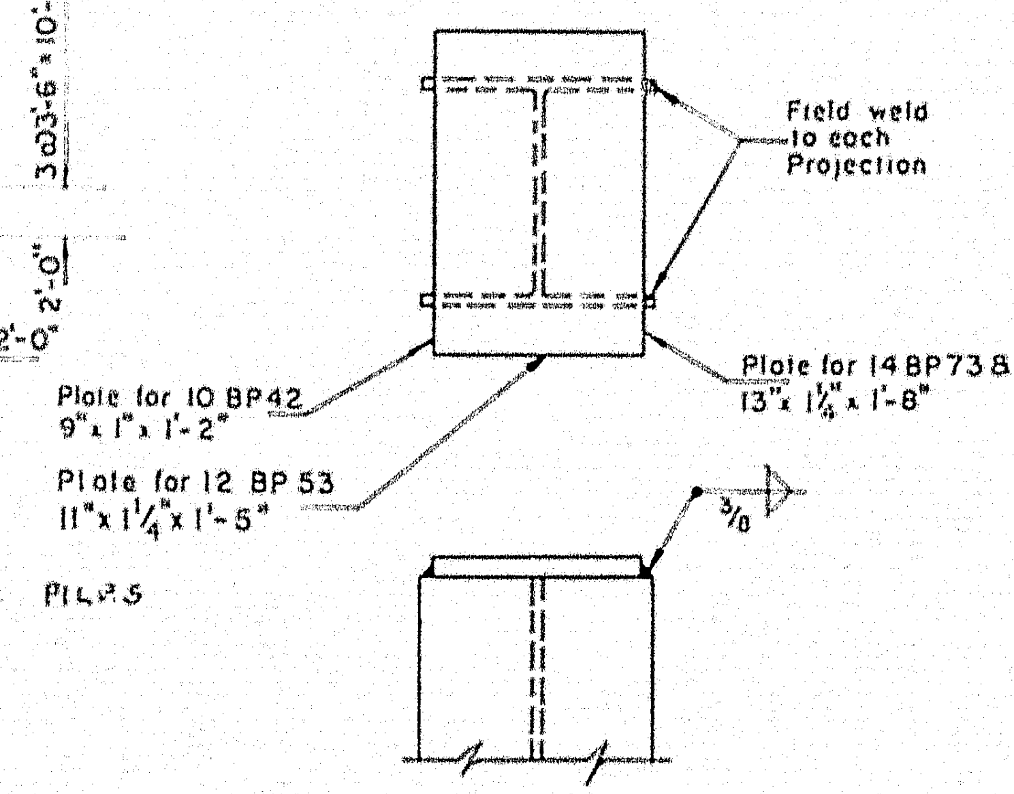
Field weld to each Projection
Plate for 10 BP42 9" x 1" x 1'-2"
Plate for 12 BP 53 11" x 1 1/4" x 1'-5"
Plate for 14 BP73 & 89 13" x 1 1/2" x 1'-8"
3/8

PILE CAP DETAIL

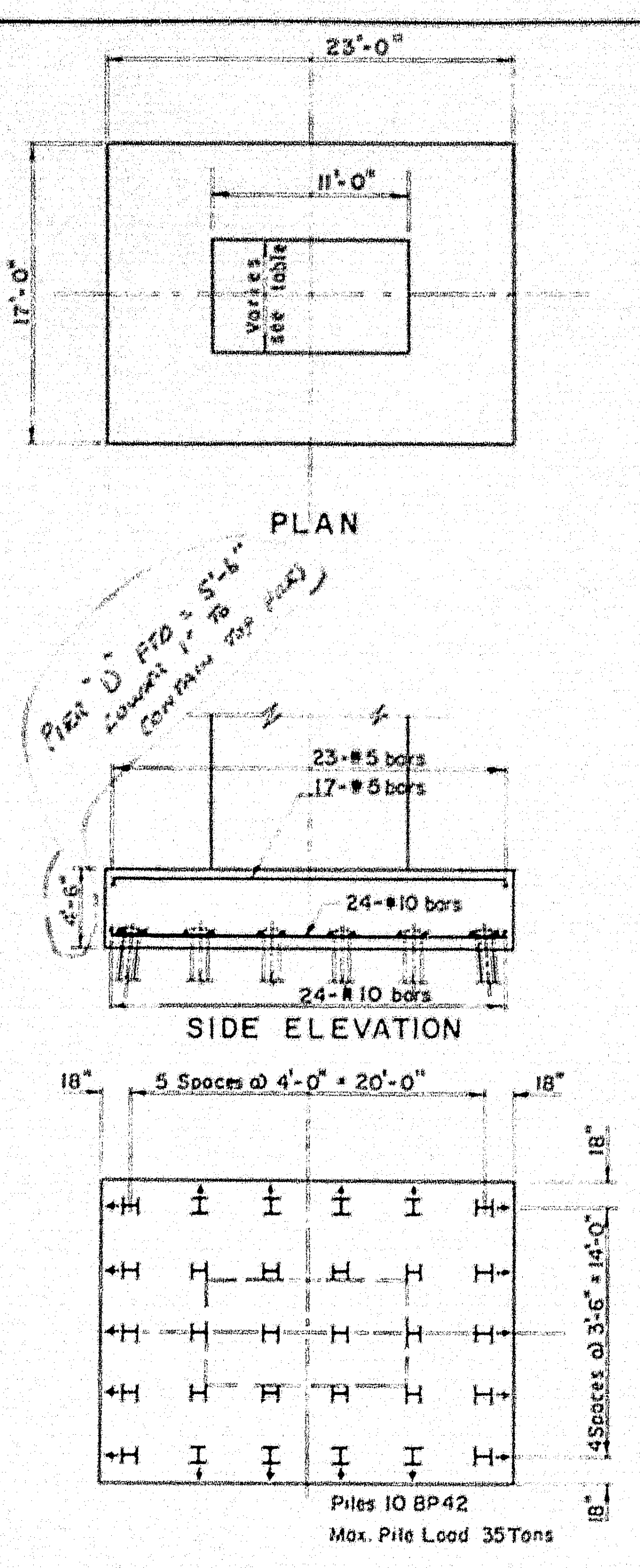
23'-0"
11'-0"
17'-0"
Varies see table
PLAN
PIER "D" FTG = 5'-6" LOWER 1" TO CONTAIN TOP PLAN)
23-#5 bars
17-#5 bars
4'-6"
24-#10 bars
24-#10 bars
SIDE ELEVATION
18"
5 Spaces @ 4'-0" = 20'-0"
18"
18"
4 Spaces @ 3'-6" = 14'-0"
18"
Piles 10 BP42
Max. Pile Load 35 Tons

PILE PLAN

PIERS D&O

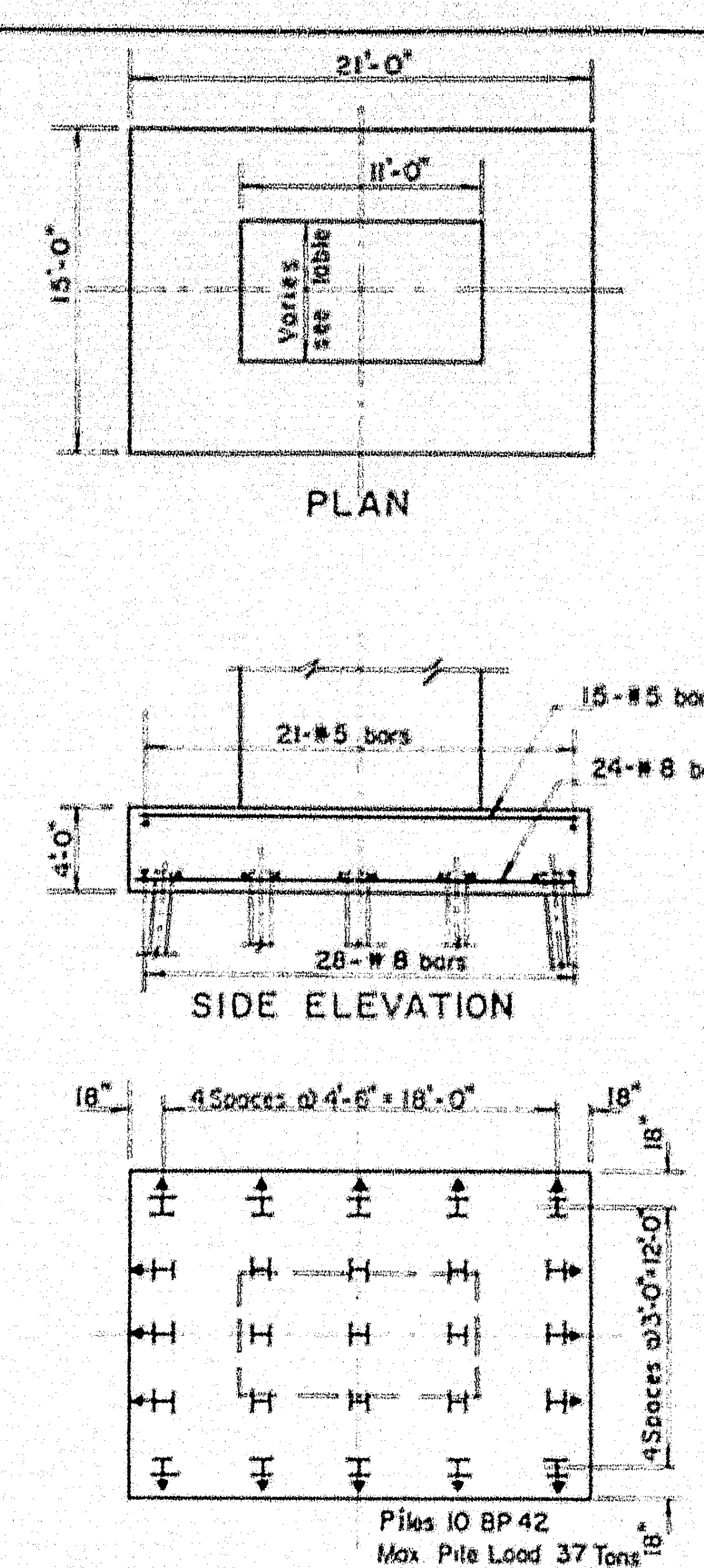
21'-0"
11'-0"
15'-0"
Varies see table
PLAN
15-#5 bars
21-#5 bars
24-#8 bars
4'-0"
28-#8 bars
SIDE ELEVATION
18"
4 Spaces @ 4'-6" = 18'-0"
18"
18"
4 Spaces @ 3'-0" = 12'-0"
18"
Piles 10 BP42
Max Pile Load 37 Tons

PILE PLAN

PIERS E, F, G, P, Q & R

Scale 1/8" = 1'-0"

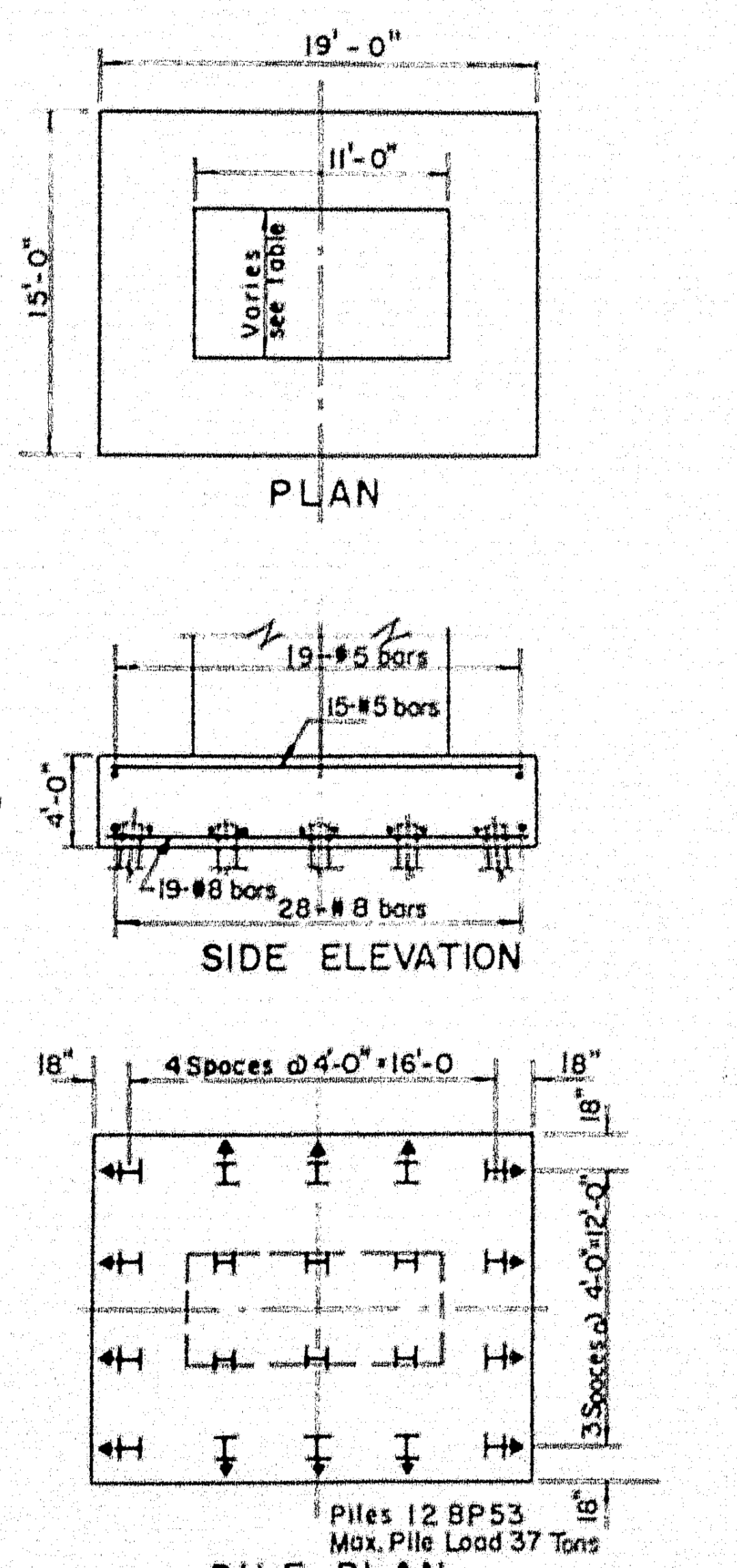
19'-0"
11'-0"
15'-0"
Varies see table
PLAN
19-#5 bars
15-#5 bars
4'-0"
19-#8 bars
28-#8 bars
SIDE ELEVATION
18"
4 Spaces @ 4'-0" = 16'-0
18"
18"
3 Spaces @ 4'-0" = 12'-0"
18"
Piles 12 BP53
Max Pile Load 37 Tons

PILE PLAN

PIERS K,S & U

Scale: 1/8" = 1'-0"

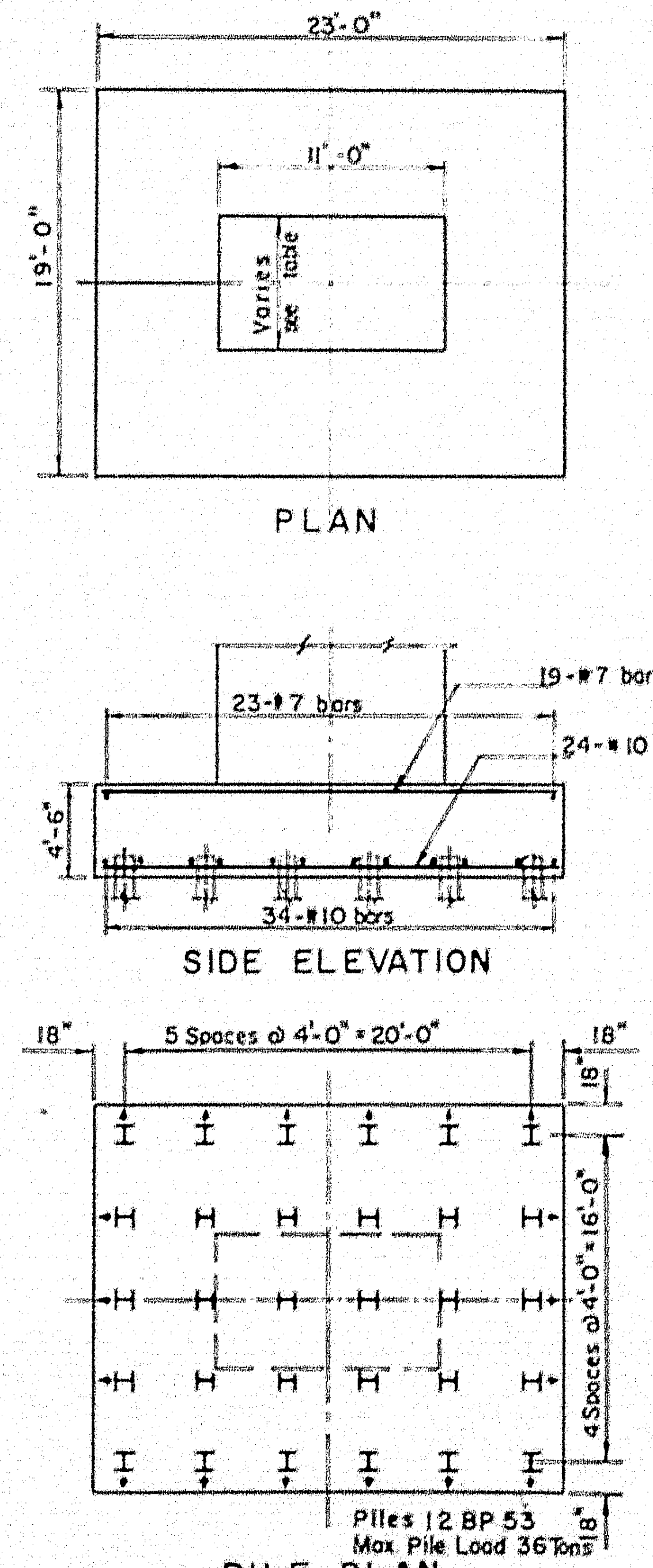
23'-0"
11'-0"
19'-0"
Varies see table
PLAN
23-#7 bars
19-#7 bars
24-#10 bars
4'-6"
34-#10 bars
SIDE ELEVATION
18"
5 Spaces @ 4'-0" = 20'-0"
18"
18"
4 Spaces @ 4'-0" = 16'-0"
18"
Piles 12 BP53
Max Pile Load 36 Tons

PILE PLAN

PIERS H,J & T

Scale: 1/8" = 1'-0"

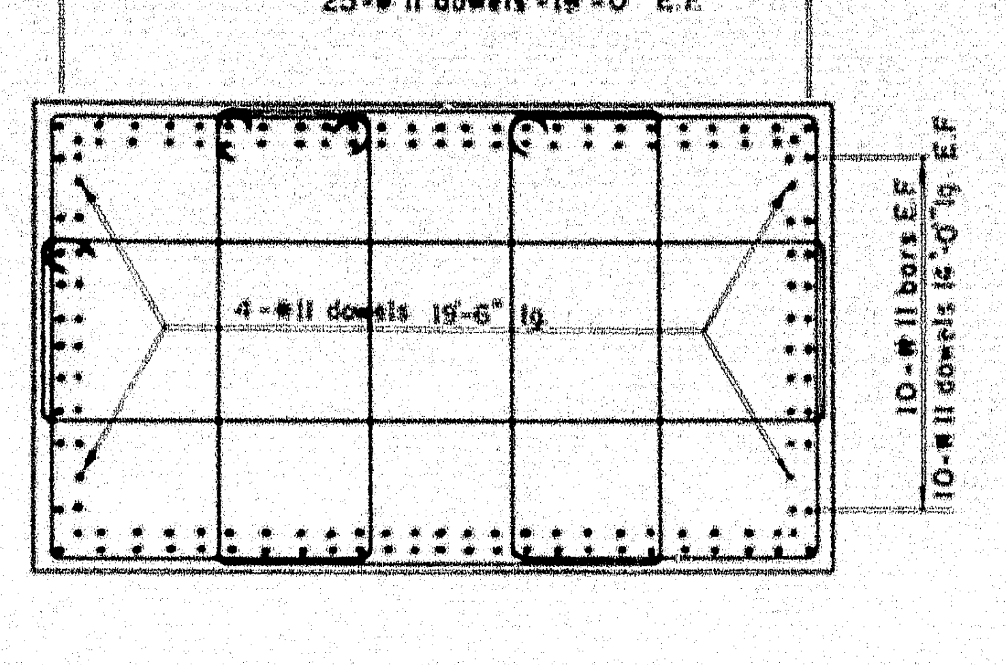
25-#11 bars E.F.
25-#11 dowels - 18'-0" E.F.
4-#11 dowels 19'-6" lg.
10-#11 bars E.F.
10-#11 dowels 18'-0" lg. E.F.

SECTION 4-4

Scale 3/8" = 1'-0"

Note All column bars and dowels to be lapped as shown.

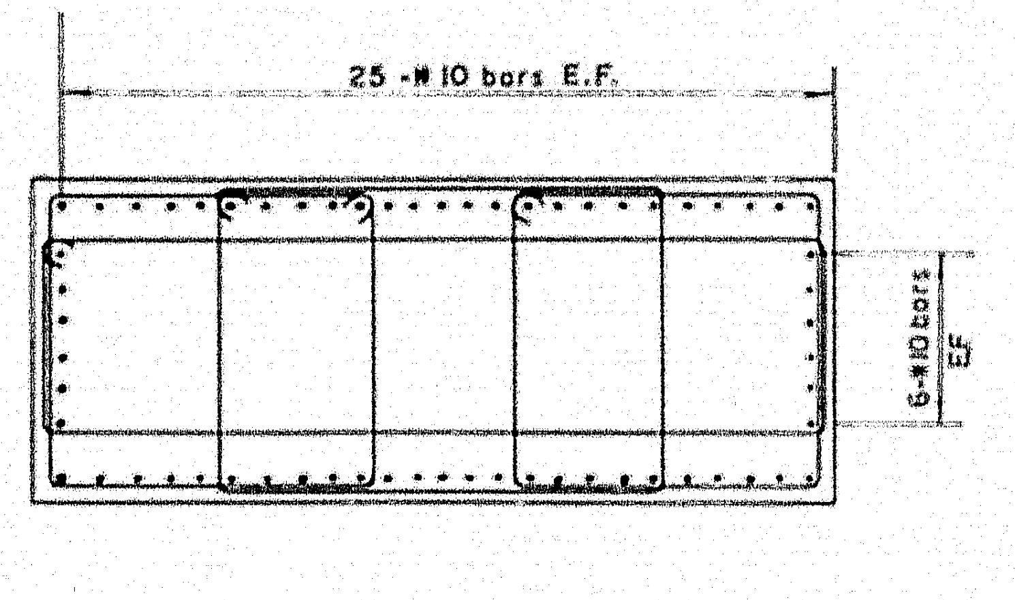
25-#10 bars E.F.
6-#10 bars E.F.

SECTION 1-1

Scale 3/8" = 1'-0"

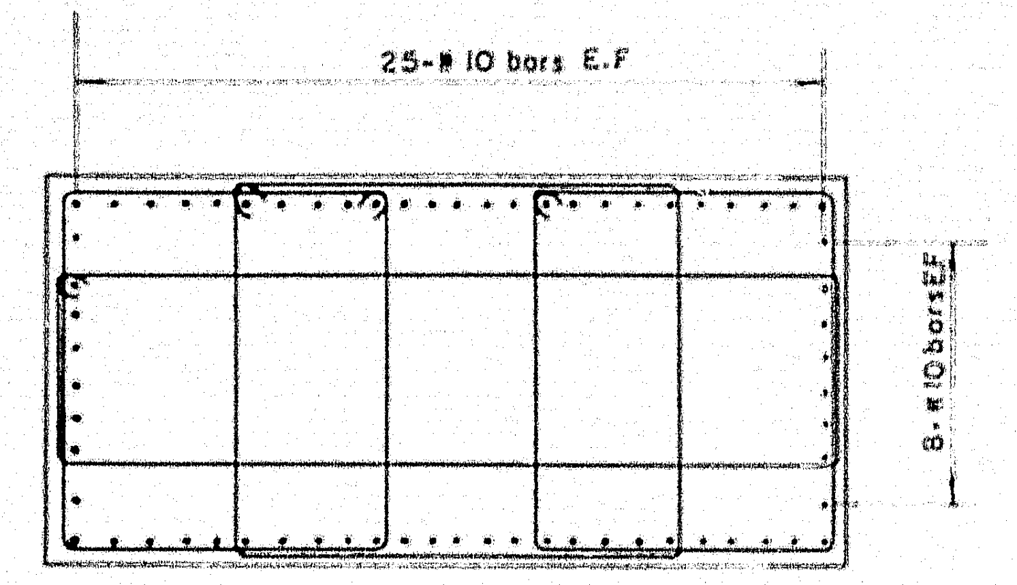
25-#10 bars E.F.
8-#10 bars E.F.

SECTION 2-2

Scale 3/8" = 1'-0"

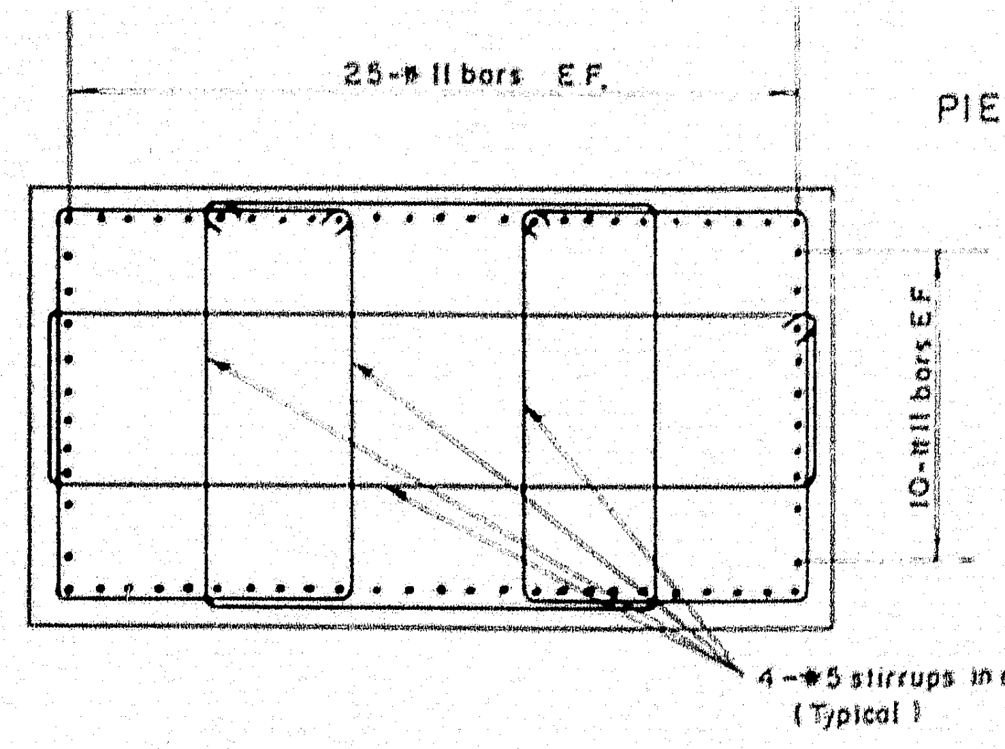
25-#11 bars E.F.
10-#11 bars E.F.
4-#5 stirrups in one layer @12"
(Typical)

SECTION 3-3

Scale 3/8" = 1'-0"

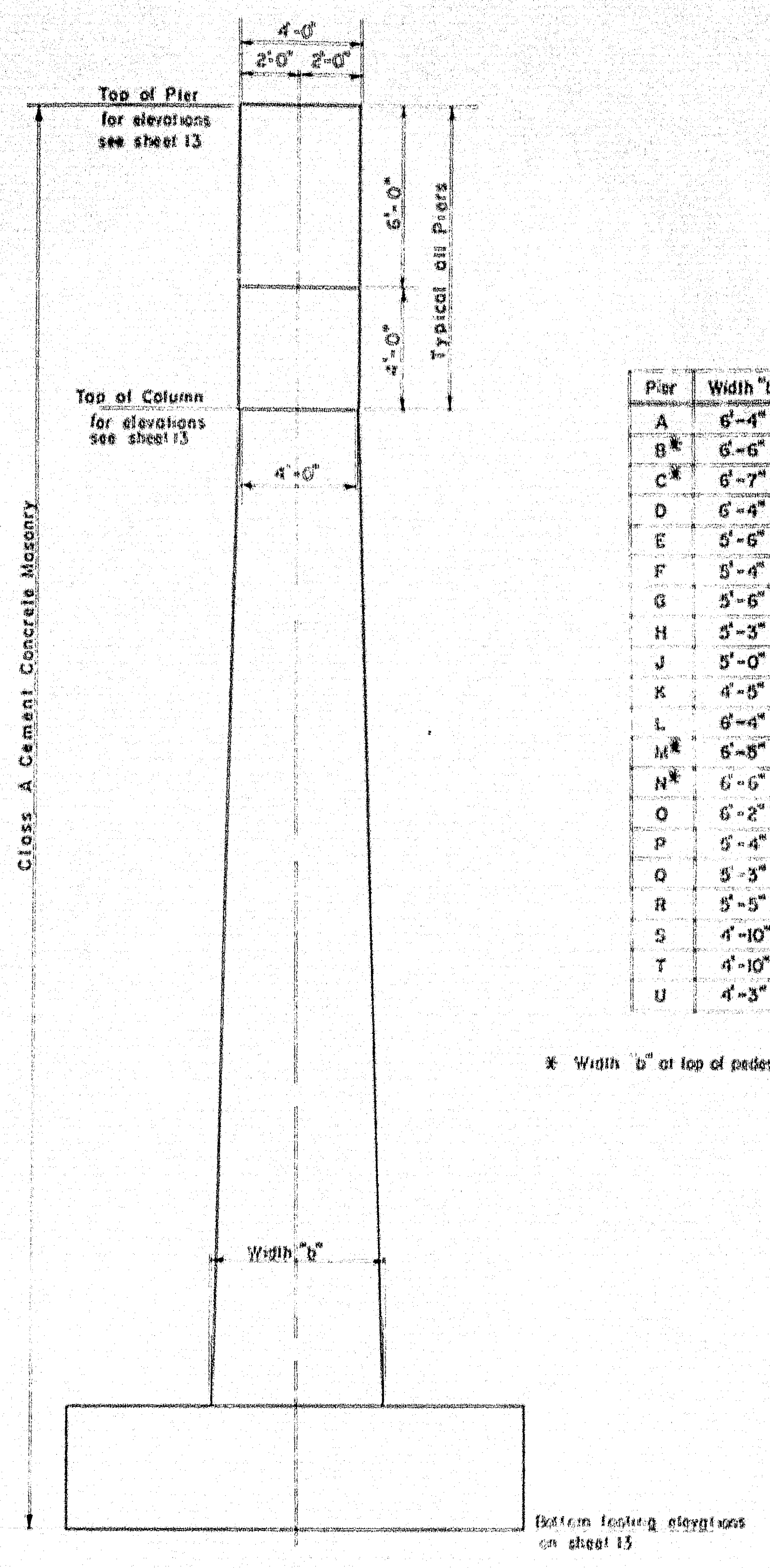
4'-0"
2'-0"
2'-0"
Top of Pier for elevations see sheet 13
6'-0"
4'-0"
Typical all Piers
Top of Column for elevations see sheet 13
4'-0"
Class A Cement Concrete Masonry
Width "b"
Bottom footing elevations on sheet 13

Pier	Width "b"
A	6'-4"
B*	6'-6"
C*	6'-7"
D	6'-4"
E	5'-6"
F	5'-4"
G	5'-6"
H	5'-3"
J	5'-0"
K	4'-5"
L	6'-4"
M*	6'-5"
N*	6'-6"
O	6'-2"
P	5'-4"
Q	5'-3"
R	5'-5"
S	4'-10"
T	4'-10"
U	4'-3"

* Width "b" at top of pedestal

TYPICAL PIER END ELEVATION

PIERS D to R & O to U Incl., A&L

PIERS B, C, M, N Similar except for pedestal footing

Notes
1. Concrete cover to steel reinforcement in footing [illegible] clear
2. Cap all piles.
3. Pile embedment - 12" for all footings.
4. All piles to be driven to bedrock or practical refusal (see Special Provisions)
5. ➛ Indicates pile battered 3:12, in direction indicated
6. For numbered section see sheet 13

THE CLARKESON ENGINEERING CO., INC.

DESIGN	M.H.P.	CHECK	[illegible]	BRIDGE NO
				SURVEY
DRAWN	D E S	APPROVED	[illegible] B.C.J.M.	PLOT

STATE HIGHWAY COMMISSION
INTERSTATE #95
OVER
MESSALONSKEE STREAM
& QUARRY ROAD (RELOC.)
IN THE CITY OF
WATERVILLE
KENNEBEC COUNTY
PIER FOOTINGS

SHEET 14 OF 23 SHEETS AUGUSTA, MAINE

78-186

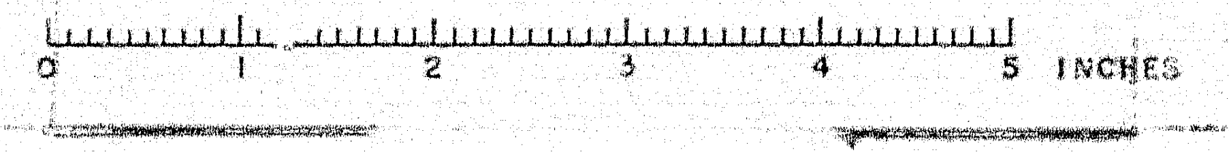
0
1
2
3
4
5
INCHES

F.P.R. REG. NO.	STATE	PROJECT NO.	SHEET NO.	TOTAL SHEETS
1	MAINE	I-95-6 (23)	22	32

WATERVILLE INTERSTATE

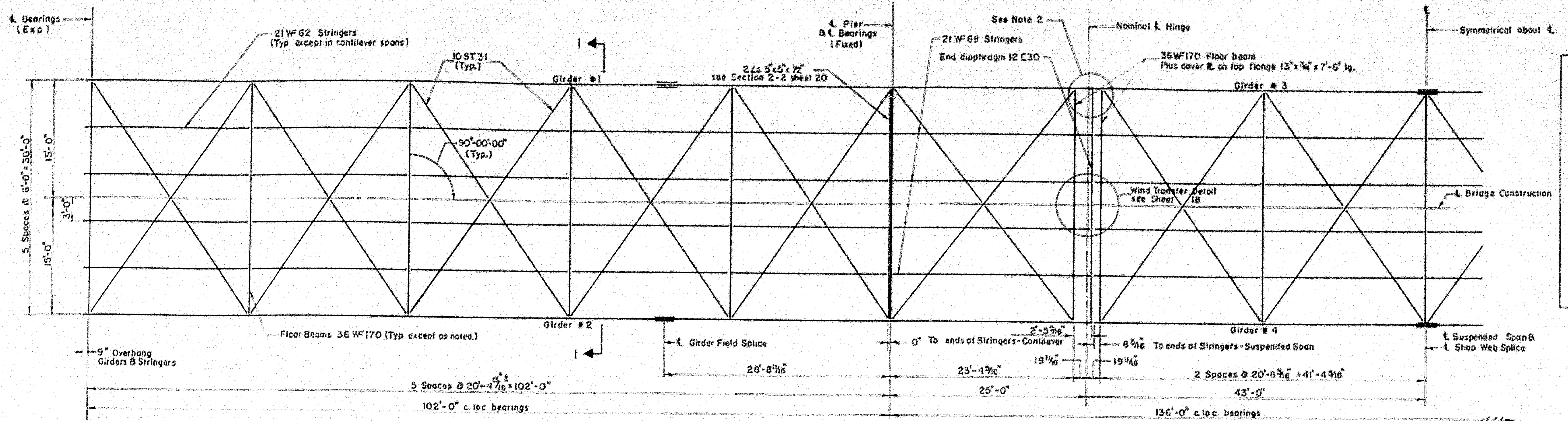
℄ Bearings (Exp)
21 WF 62 Stringers (Typ. except in cantilever spans)
10 ST 31 (Typ.)
1
Girder #1
2 ∠s 5"x5"x½" see Section 2-2 sheet 20
℄ Pier & ℄ Bearings (Fixed)
21 WF 68 Stringers
End diaphragm 12 ⊏ 30
See Note 2
Nominal ℄ Hinge
36 WF 170 Floor beam Plus cover ℞ on top flange 13"x¾"x7'-6" lg.
Girder #3
Symmetrical about ℄
90°-00'-00" (Typ.)
Wind Transfer Detail see Sheet 18
℄ Bridge Construction
5 Spaces @ 6'-0" = 30'-0"
15'-0"
3'-0"
15'-0"
Girder #2
Floor Beams 36 WF 170 (Typ except as noted.)
9" Overhang Girders & Stringers
℄ Girder Field Splice
0" To ends of Stringers - Cantilever
2'-5⅝"
8 5/16" To ends of Stringers - Suspended Span
19 11/16"
19 11/16"
Girder #4
℄ Suspended Span & ℄ Shop Web Splice
28'-8 11/16"
23'-4 5/16"
2 Spaces @ 20'-8 5/16" = 41'-4 9/16"
5 Spaces @ 20'-4 13/16" = 102'-0"
25'-0"
43'-0"
102'-0" c. to c. bearings
136'-0" c. to c. bearings

FRAMING PLAN
SPANS 1,2,3,12,13, & 14

Scale: ⅛" = 1'-0"

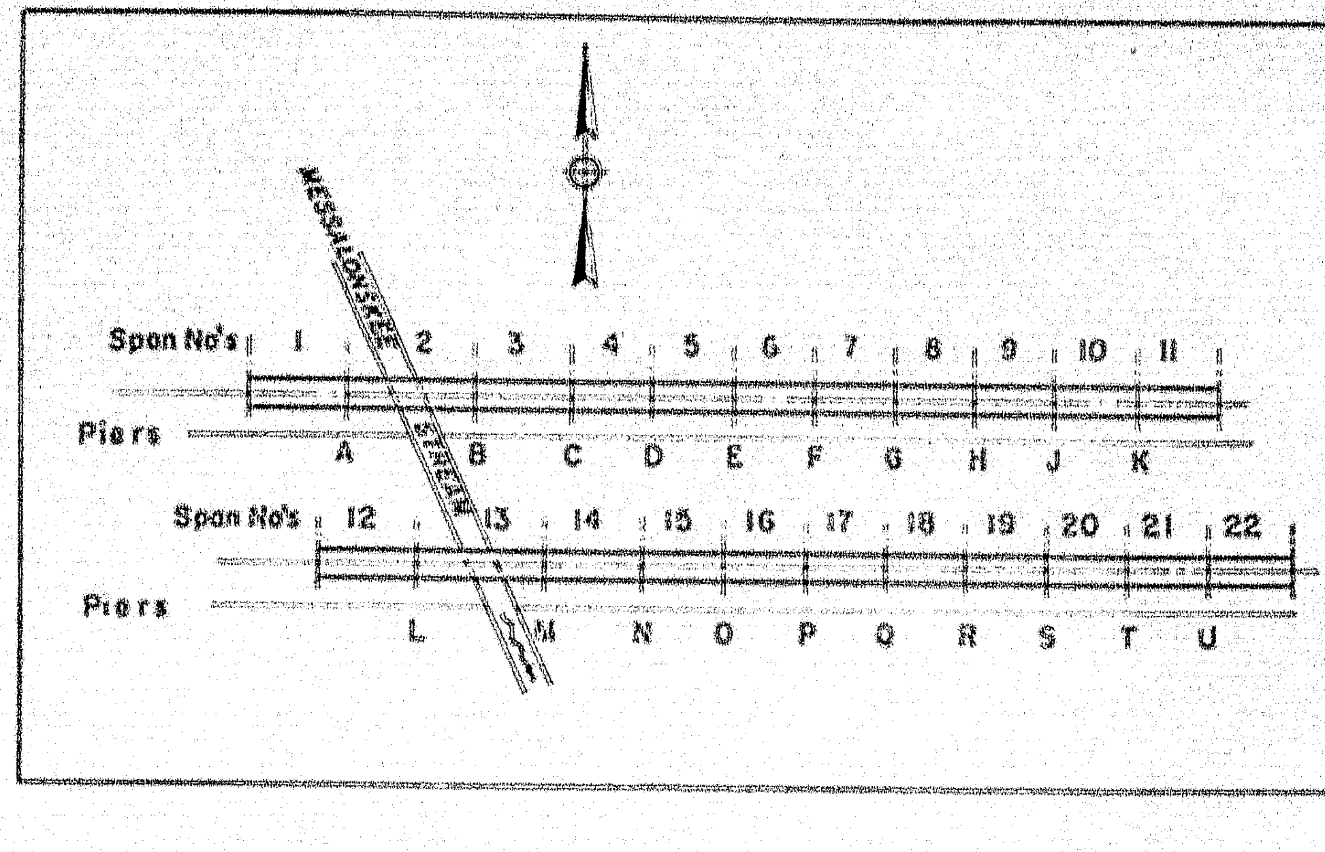
MESSALONSKEE STREAM
Span No's 1 2 3 4 5 6 7 8 9 10 11
Piers A B C D E F G H J K
Span No's 12 13 14 15 16 17 18 19 20 21 22
Piers L M N O P Q R S T U

KEY PLAN

No Scale

Notes
1. All rivets are to be ⅞" ø. Holes are to be 15/16" ø.
2. For overall dimensions of girder in vicinity of hinge see Hinge Detail sheet 18
3. For Sections 1-1 & 5-5 see sheet 16.
4. Girders are to be cambered to the extent that the bridge deck under full dead load will follow as nearly as practicable the design profile.
5. For scupper location see sheet 8; for scupper details see sheet 7.
6. For lateral bracing details see sheet 20.
7. High tensile strength bolts may be used in place of rivets for field connections

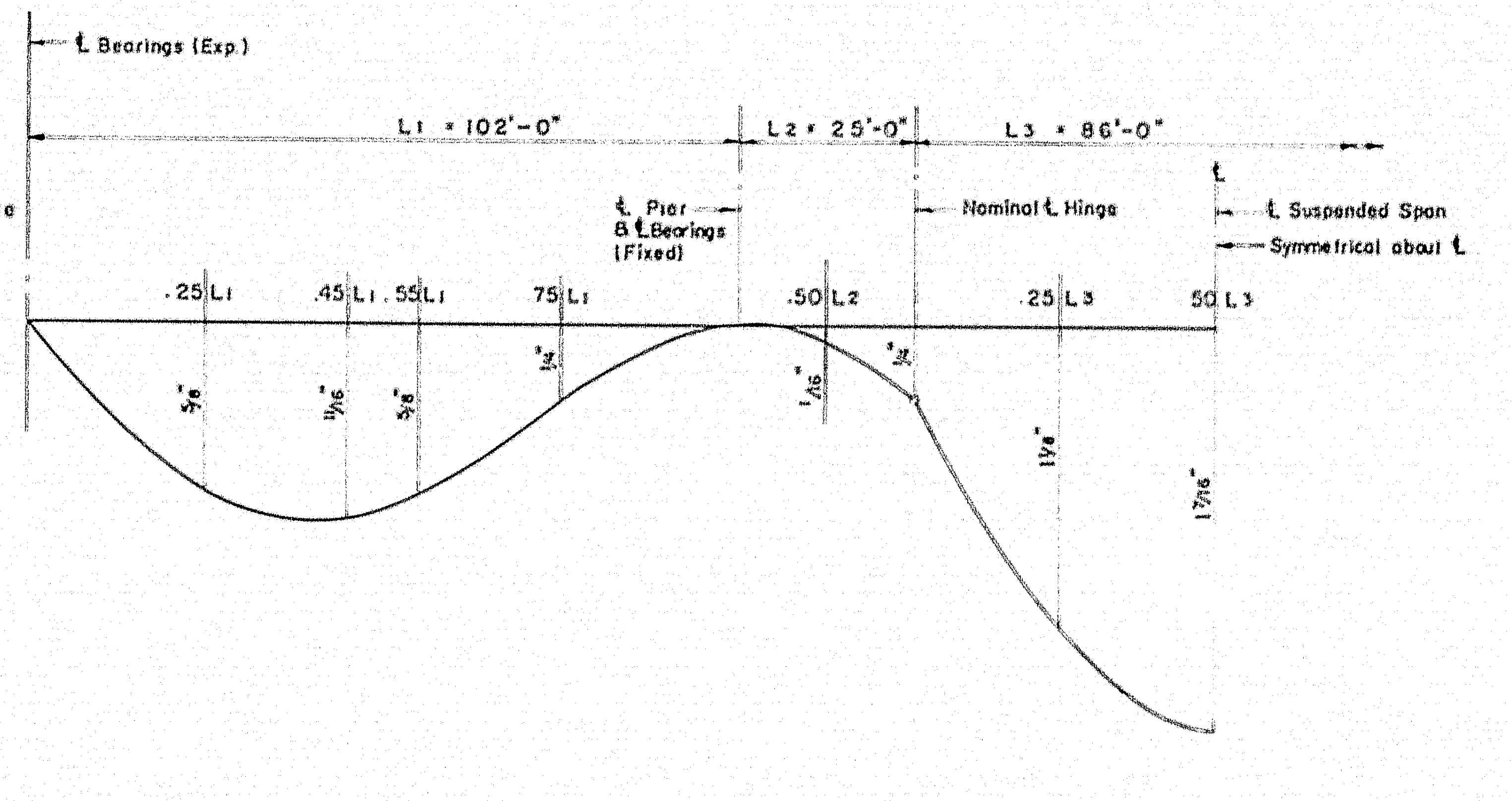

TOTAL DEAD LOAD DEFLECTION DIAGRAM
(GIRDER SPANS)

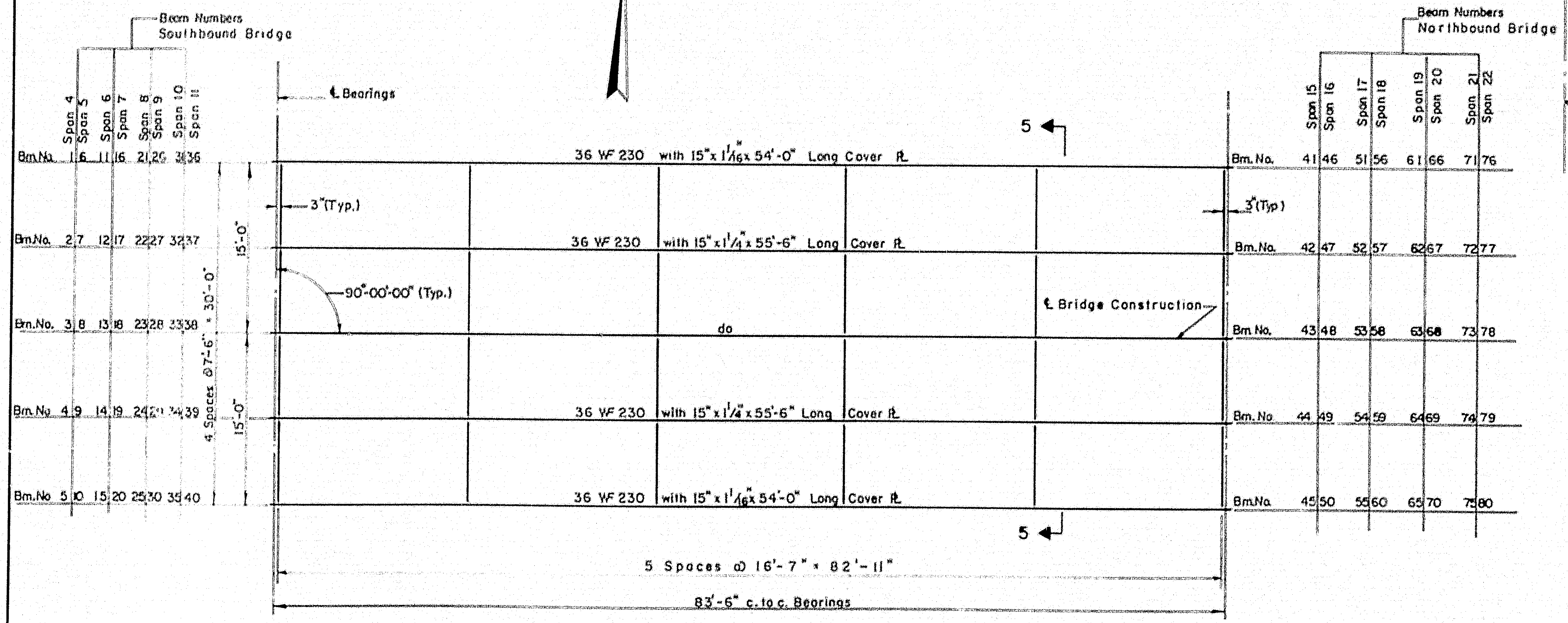
Beam Numbers Southbound Bridge
Span 4
Span 5
Span 6
Span 7
Span 8
Span 9
Span 10
Span 11
Bm. No. 1 6 11 16 21 26 31 36
Bm. No. 2 7 12 17 22 27 32 37
Bm. No. 3 8 13 18 23 28 33 38
Bm. No. 4 9 14 19 24 29 34 39
Bm. No. 5 10 15 20 25 30 35 40
15'-0"
4 Spaces @ 7'-6" = 30'-0"
15'-0"
℄ Bearings
3" (Typ.)
90°-00'-00" (Typ.)
36 WF 230 with 15"x1 1/16" x 54'-0" Long Cover ℞
36 WF 230 with 15"x1¼"x55'-6" Long Cover ℞
do
36 WF 230 with 15"x1¼"x55'-6" Long Cover ℞
36 WF 230 with 15"x1 1/16" x 54'-0" Long Cover ℞
℄ Bridge Construction
5
5
3" (Typ)
Beam Numbers Northbound Bridge
Span 15
Span 16
Span 17
Span 18
Span 19
Span 20
Span 21
Span 22
Bm. No. 41 46 51 56 61 66 71 76
Bm. No. 42 47 52 57 62 67 72 77
Bm. No. 43 48 53 58 63 68 73 78
Bm. No. 44 49 54 59 64 69 74 79
Bm. No. 45 50 55 60 65 70 75 80
5 Spaces @ 16'-7" = 82'-11"
83'-6" c. to c. Bearings

FRAMING PLAN
SPANS 4 TO 11 & 15 TO 22

Scale: ⅛" = 1'-0"

Notes.
1. All intermediate diaphragms to be 18 ⊏ 42.7, for detail see sheet 22.
2. All end diaphragms to be 12 ⊏ 12.0; for details see sheet 22.
3. For cover plate and shear connector details see sheet 22.
4. Beams and cover plates are A373 steel.

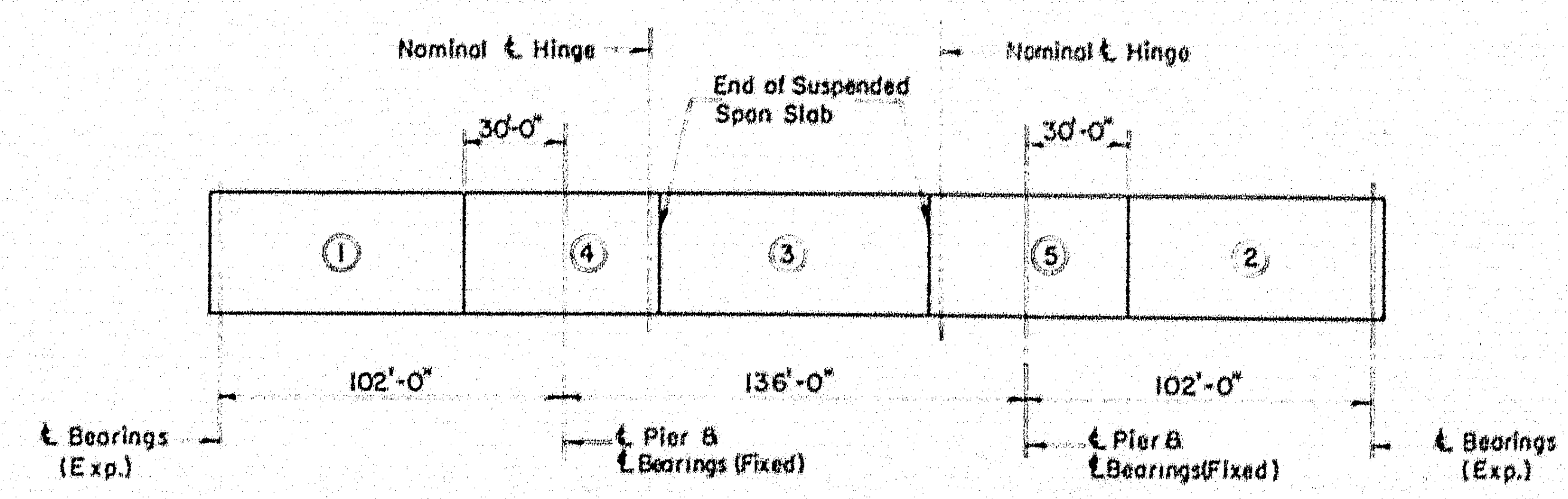
Nominal ℄ Hinge
End of Suspended Span Slab
Nominal ℄ Hinge
30'-0"
30'-0"
①
④
③
⑤
②
102'-0"
136'-0"
102'-0"
℄ Bearings (Exp.)
℄ Pier & ℄ Bearings (Fixed)
℄ Pier & ℄ Bearings (Fixed)
℄ Bearings (Exp.)

Note: All of sections 1 & 2 to be poured before any of section 3. All of section 3 to be poured before any of sections 4 & 5.

DECK POURING SEQUENCE
(GIRDER SPANS)

THE CLARKESON ENGINEERING CO., INC.

DESIGN R.F. & G.B.	CHECK J.F.M. & J.T.	BRIDGE NO
		SURVEY
DRAWN E.K.	APPROVED W.A.H.-C.J.M.	PLOT

STATE HIGHWAY COMMISSION
INTERSTATE #95
OVER
MESSALONSKEE STREAM & QUARRY ROAD (RELOC.)
IN THE CITY OF
WATERVILLE
KENNEBEC COUNTY
FRAMING PLAN

SHEET 15 OF 23 SHEETS
AUGUSTA, MAINE

78-187

0 1 2 3 4 5 INCHES

B.P.R. REG. NO.	STATE	PROJECT NO.	SHEET NO.	TOTAL SHEETS
1	MAINE	I-95-6(23)	23	32

WATERVILLE INTERSTATE

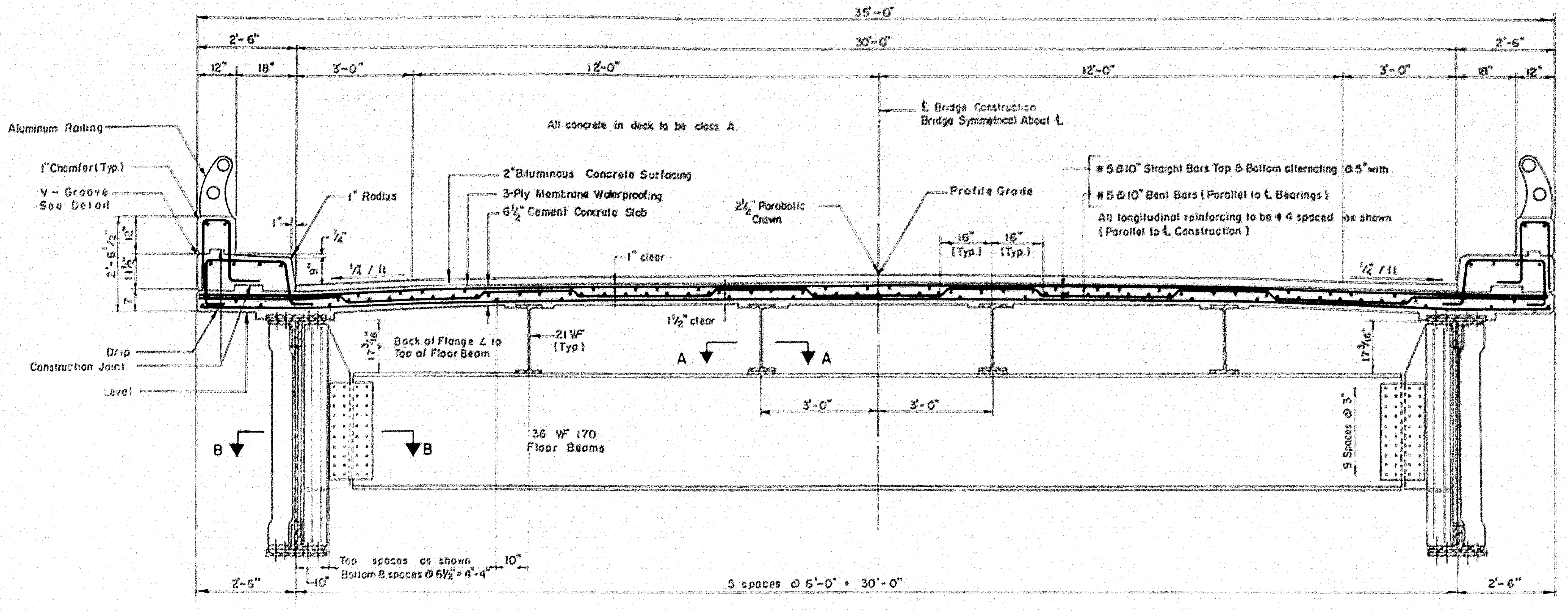
35'-0"
30'-0"
2'-6"
12"
18"
3'-0"
12'-0"
Aluminum Railing
1" Chamfer (Typ.)
V - Groove See Detail
1" Radius
All concrete in deck to be class A
2" Bituminous Concrete Surfacing
3-Ply Membrane Waterproofing
6½" Cement Concrete Slab
℄ Bridge Construction
Bridge Symmetrical About ℄
2½" Parabolic Crown
Profile Grade
#5 @10" Straight Bars Top & Bottom alternating @5" with
#5 @10" Bent Bars (Parallel to ℄ Bearings)
All longitudinal reinforcing to be #4 spaced as shown (Parallel to ℄ Construction)
16" (Typ)
1" clear
¼" / ft.
1½" clear
Back of Flange ∠ to Top of Floor Beam
21 WF (Typ)
A
Drip
Construction Joint
Level
B
36 WF 170 Floor Beams
3'-0"
9 Spaces @ 3"
Top spaces as shown
Bottom 8 spaces @ 6½" = 4'-4"
10"
5 spaces @ 6'-0" = 30'-0"

SECTION 1-1

BRIDGE CROSS SECTION (GIRDER SPANS)
Scale ½" = 1'-0"

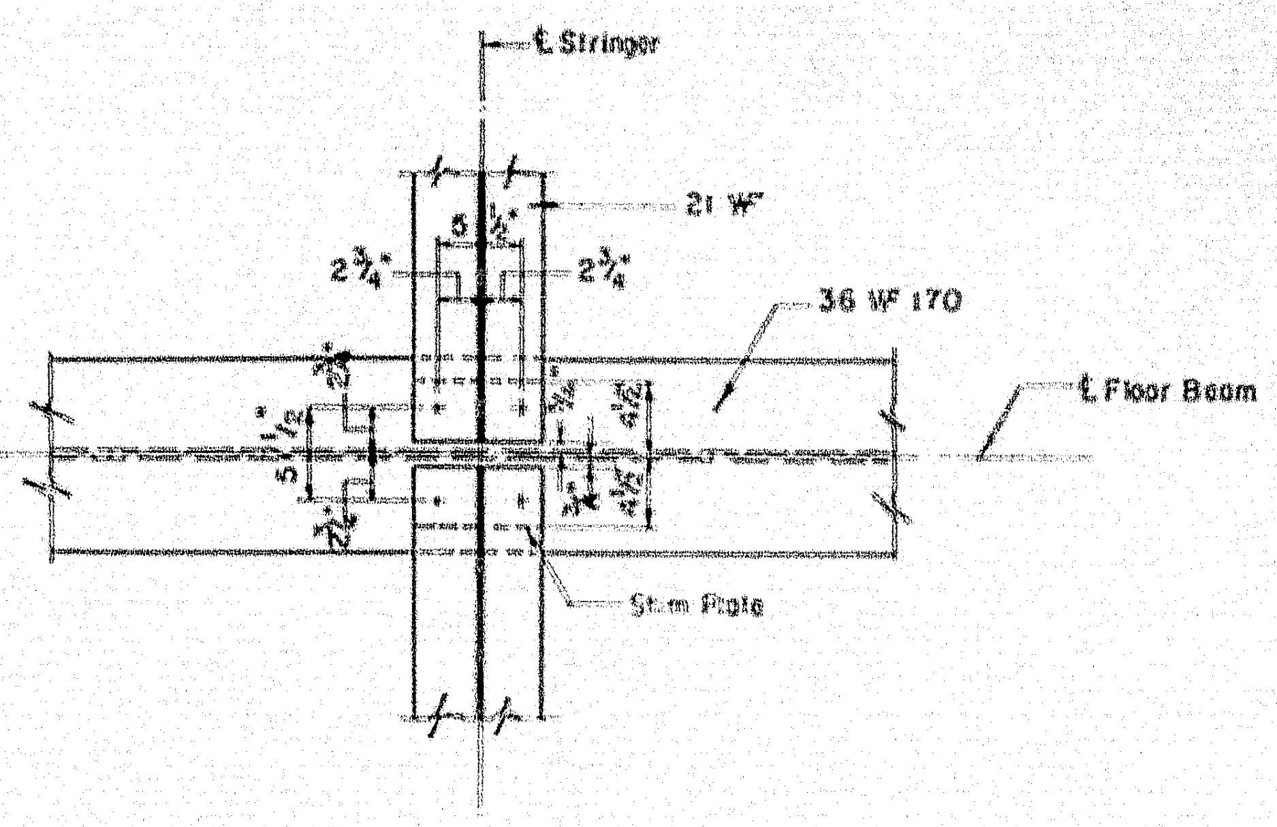
℄ Stringer
21 WF
2¾"
5½"
36 WF 170
℄ Floor Beam
Stem Plate

SECTION A-A

Scale 1" = 1'-0"

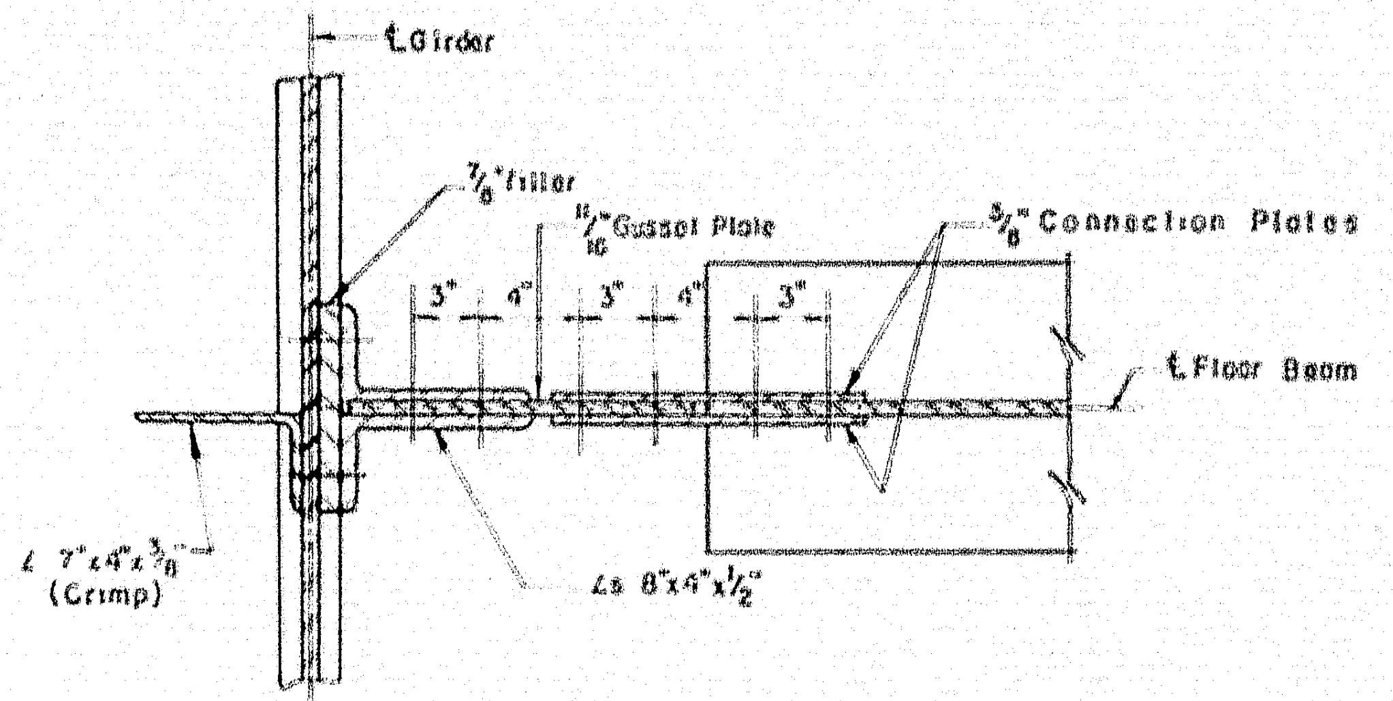
℄ Girder
⅞" Filler
11/16" Gusset Plate
⅝" Connection Plates
3"
4"
℄ Floor Beam
∠ 7"×4"×⅝" (Crimp)
∠s 8"×4"×½"

SECTION B-B

Scale 1½" = 1'-0"

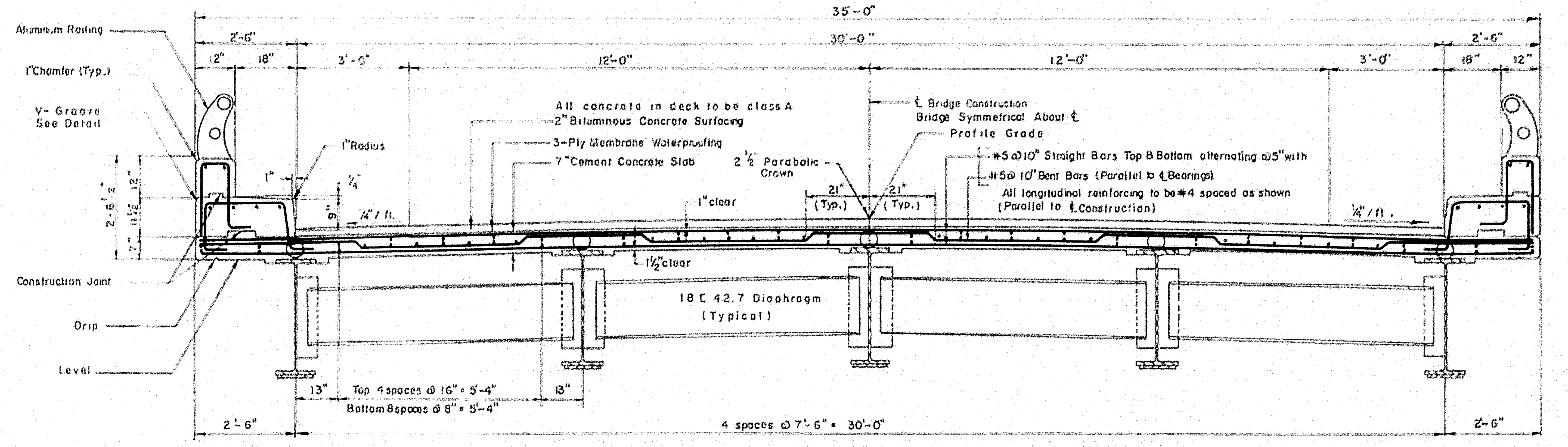
35'-0"
30'-0"
2'-6"
12"
18"
3'-0"
12'-0"
Aluminum Railing
1" Chamfer (Typ.)
V - Groove See Detail
1" Radius
All concrete in deck to be class A
2" Bituminous Concrete Surfacing
3-Ply Membrane Waterproofing
7" Cement Concrete Slab
℄ Bridge Construction
Bridge Symmetrical About ℄
Profile Grade
2½" Parabolic Crown
21" (Typ.)
#5 @10" Straight Bars Top & Bottom alternating @5" with
#5 @ 10" Bent Bars (Parallel to ℄ Bearings)
All longitudinal reinforcing to be #4 spaced as shown (Parallel to ℄ Construction)
1" clear
¼" / ft.
1½" clear
Construction Joint
Drip
Level
18 [42.7 Diaphragm (Typical)
13"
Top 4 spaces @ 16" = 5'-4"
Bottom 8 spaces @ 8" = 5'-4"
4 spaces @ 7'-6" = 30'-0"

SECTION 5-5

TYPICAL BRIDGE CROSS SECTION (STRINGER SPANS)
Scale: ½" = 1'-0"

Notes:
1. Bituminous Concrete Surfacing and 3-Ply Membrane Waterproofing are not in this contract.
2. Parapets and safety walks to have transverse construction joints 20' ± on centers. Joints are not to be located under railing post. Contact surfaces of joints to be painted with a bituminous material. Exposed surfaces are to be chamfered ½". Reinforcing steel to be carried thru joints.
3. All deck slab concrete in each stringer span shall be placed in one continuous operation.

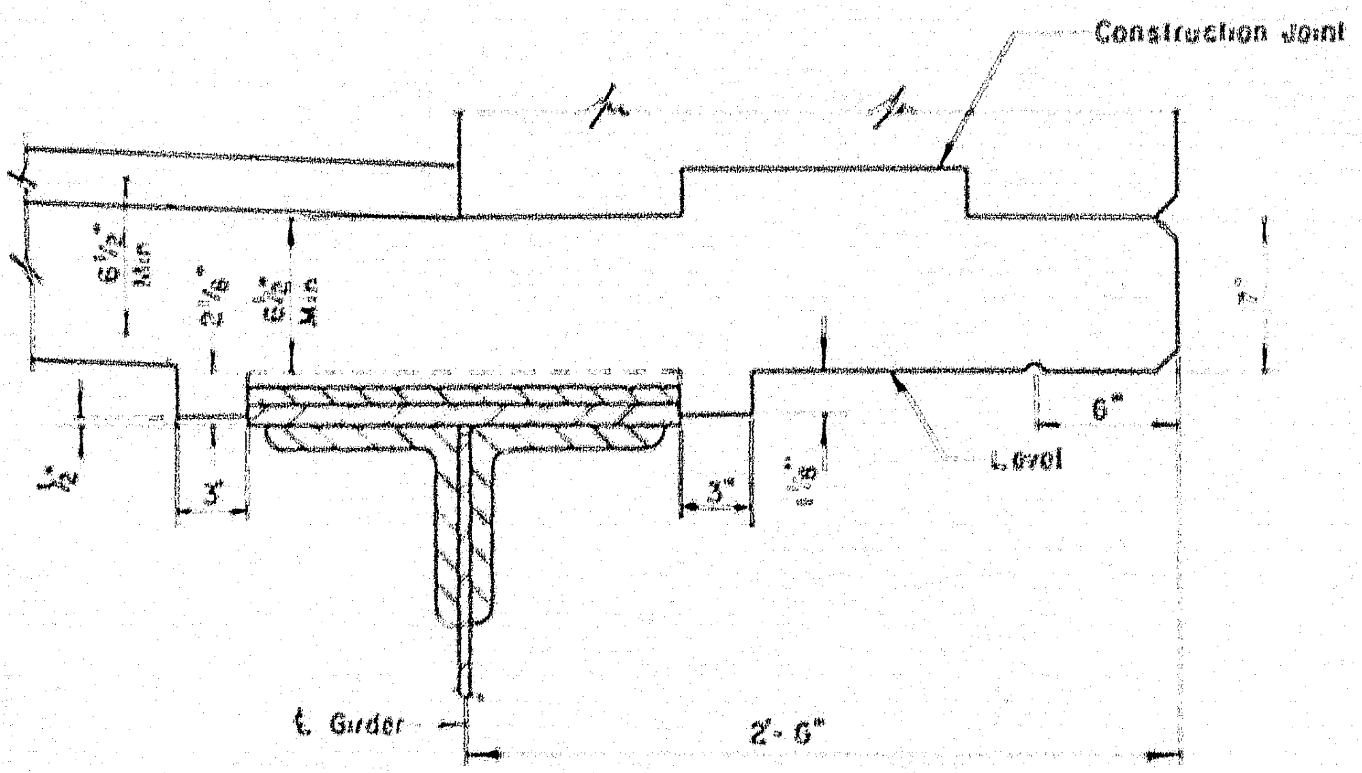
Construction Joint
6½" Min.
6"
Level
3"
℄ Girder
2'-6"

GIRDER HAUNCH DETAIL

Scale 1½" = 1'-0"

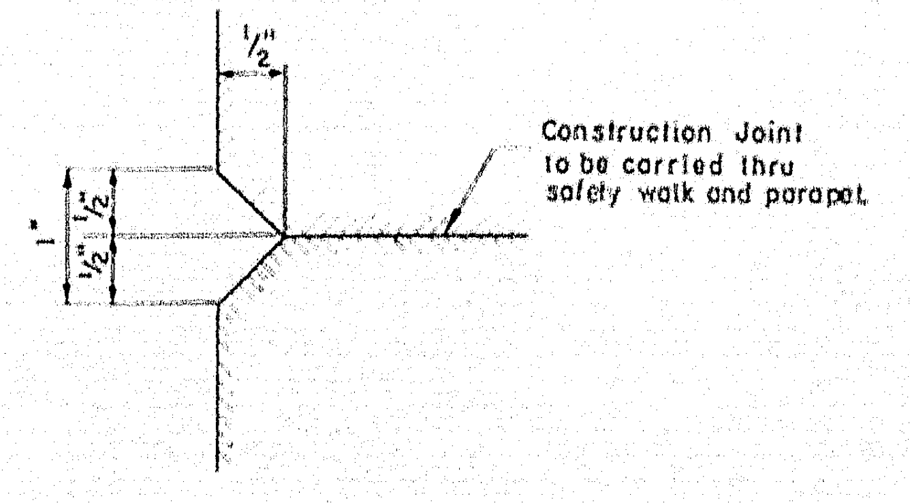
½"
1"
Construction Joint to be carried thru safety walk and parapet.

V-GROOVE DETAIL

Not to scale

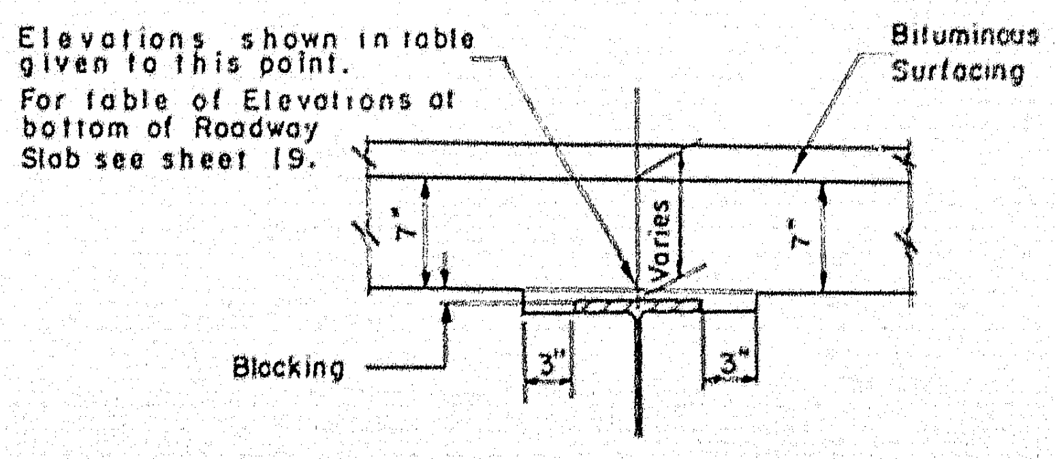
Elevations shown in table given to this point.
For table of Elevations at bottom of Roadway Slab see sheet 19.
Bituminous Surfacing
7"
Varies
Blocking
3"

STRINGER HAUNCH DETAIL (STRINGER SPANS)

Scale: 1" = 1'-0"

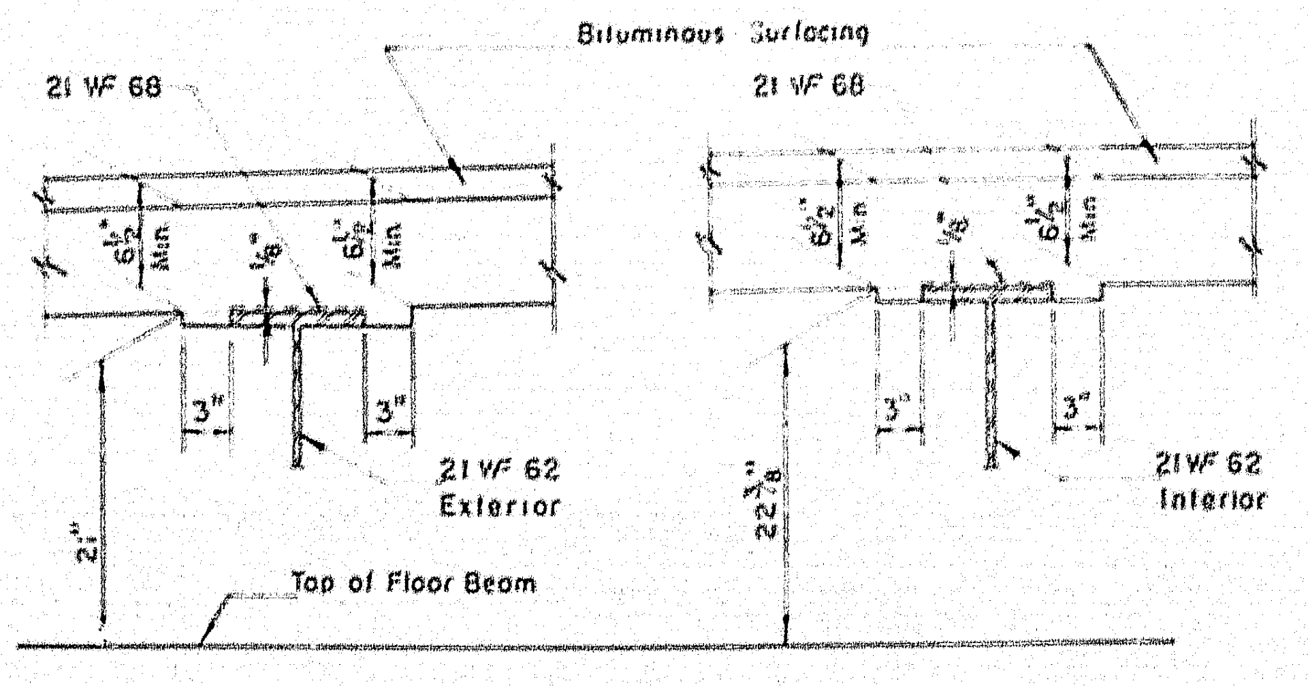
Bituminous Surfacing
21 WF 68
6½" Min.
3"
21 WF 62 Exterior
21 WF 62 Interior
Top of Floor Beam

STRINGER HAUNCH DETAIL (GIRDER SPANS)

Scale: 1" = 1'-0"

THE CLARKESON ENGINEERING CO., INC.

DESIGN R.F. & G.B.	CHECK J.I.M. & J.T.	BRIDGE NO.
DRAWN D.A.T.	APPROVED W.A.H.-C.A.M.	SURVEY PLOT

STATE HIGHWAY COMMISSION
INTERSTATE #95
OVER
MESSALONSKEE STREAM
& QUARRY ROAD (RELOC.)
IN THE CITY OF
WATERVILLE
KENNEBEC COUNTY
TYPICAL BRIDGE CROSS SECTIONS

SHEET 16 OF 23 SHEETS AUGUSTA, MAINE

78-188

0 1 2 3 4 5 INCHES

B.P.R. REG. NO.	STATE	PROJECT NO.	SHEET NO.	TOTAL SHEETS
1	MAINE	I-95-6 (23)	24	32

WATERVILLE INTERSTATE

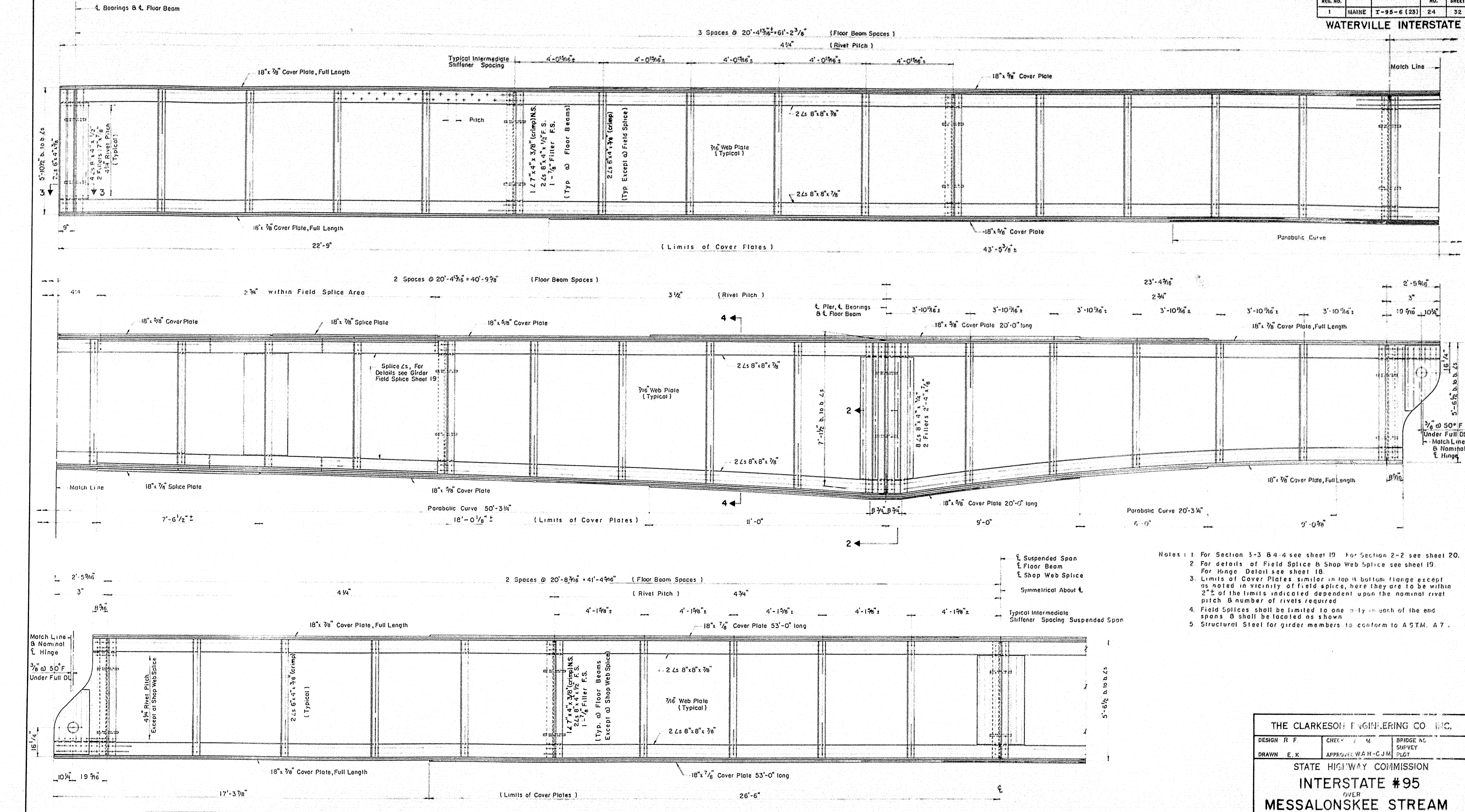

℄ Bearings & ℄ Floor Beam
3 Spaces @ 20'-4 13/16" ± = 61'-2 7/16" (Floor Beam Spaces)
4 1/4" (Rivet Pitch)
Typical Intermediate Stiffener Spacing
4'-0 15/16" ±
18" x 7/8" Cover Plate, Full Length
18" x 7/8" Cover Plate
Match Line
Pitch
2 ∠s 8" x 8" x 7/8"
7/16" Web Plate (Typical)
1 ∠ 7" x 4" x 3/8" (crimp) N.S.
2 ∠s 6" x 4" x 1/2" F.S.
1 - 7/8" Filler F.S.
(Typ @ Floor Beams)
2 ∠s 6" x 4" x 3/8" (crimp)
(Typ Except @ Field Splice)
5'-10 1/2" b. to b. ∠s
2 ∠s 6" x 4" x 7/8"
4 ∠s 8" x 4" x 1/2"
2 Fillers 7" x 7/8"
2 1/4" Rivet Pitch (Typical)
3
9"
18" x 7/8" Cover Plate, Full Length
22'-9"
(Limits of Cover Plates)
18" x 7/8" Cover Plate
43'-9 3/8" ±
Parabolic Curve
2 Spaces @ 20'-4 13/16" = 40'-9 7/8" (Floor Beam Spaces)
4 1/4
2 3/4" within Field Splice Area
3 1/2" (Rivet Pitch)
18" x 7/8" Cover Plate
18" x 7/8" Splice Plate
18" x 5/8" Cover Plate
4
Splice ∠s, For Details see Girder Field Splice Sheet 19
7/16" Web Plate (Typical)
2 ∠s 8" x 8" x 7/8"
℄ Pier, ℄ Bearings & ℄ Floor Beam
7'-1 1/2" b. to b. ∠s
2
8 ∠s 8" x 4" x 3/4"
2 Fillers 2'-4" x 7/16"
23'-4 3/16"
2 3/4"
3'-10 13/16" ±
18" x 5/8" Cover Plate 20'-0" long
18" x 7/8" Cover Plate, Full Length
2'-5 9/16"
3"
19 5/16"
10 1/4"
16 1/4"
5'-6 1/2" b. to b. ∠s
3/8" @ 50° F Under Full DL
Match Line & Nominal ℄ Hinge
Match Line
18" x 7/8" Splice Plate
18" x 5/8" Cover Plate
18" x 7/8" Cover Plate, Full Length
18" x 5/8" Cover Plate 20'-0" long
8 3/4"
8 5/16"
Parabolic Curve 50'-3 1/4"
7'-6 1/2" ±
18'-0 1/8" ±
(Limits of Cover Plates)
11'-0"
9'-0"
Parabolic Curve 20'-3 1/4"
6'-0"
9'-0 7/8"
℄ Suspended Span
℄ Floor Beam
℄ Shop Web Splice
Symmetrical About ℄
2 Spaces @ 20'-8 3/16" = 41'-4 3/8" (Floor Beam Spaces)
4 1/4"
(Rivet Pitch)
4 3/4"
4'-1 5/8" ±
Typical Intermediate Stiffener Spacing Suspended Span
18" x 7/8" Cover Plate, Full Length
18" x 7/8" Cover Plate 53'-0" long
Match Line & Nominal ℄ Hinge
3/8" @ 50° F Under Full DL
4 3/4" Rivet Pitch Except at Shop Web Splice
2 ∠s 6" x 4" x 3/8" (crimp) (Typical)
1 ∠ 7" x 4" x 3/8" (crimp) N.S.
2 ∠s 6" x 4" x 1/2" F.S.
1 - 7/8" Filler F.S.
(Typ. @ Floor Beams Except @ Shop Web Splice)
2 ∠s 8" x 8" x 7/8"
7/16" Web Plate (Typical)
5'-6 1/2" b. to b. ∠s
10 1/4"
19 5/16"
17'-3 7/8"
(Limits of Cover Plates)
26'-6"
℄

Notes:
1. For Section 3-3 & 4-4 see sheet 19. For Section 2-2 see sheet 20.
2. For details of Field Splice & Shop Web Splice see sheet 19. For Hinge Detail see sheet 18.
3. Limits of Cover Plates similar in top & bottom flange except as noted in vicinity of field splice, here they are to be within 2" ± of the limits indicated dependent upon the nominal rivet pitch & number of rivets required.
4. Field Splices shall be limited to one only in each of the end spans & shall be located as shown.
5. Structural Steel for girder members to conform to A.S.T.M. A 7.

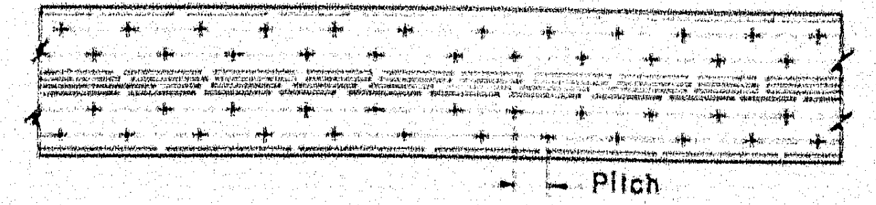

TYPICAL RIVET ARRANGEMENT
EXCEPT AT FIELD SPLICES

GIRDER ELEVATION

Scale: 1/2" = 1'-0"

THE CLARKESON ENGINEERING CO. INC.

DESIGN R. F.	CHECK J. M.	BRIDGE NO.
DRAWN E. K.	APPROVED W.A.H.-C.J.M.	SURVEY PLOT

STATE HIGHWAY COMMISSION
INTERSTATE #95
OVER
MESSALONSKEE STREAM
& QUARRY ROAD (RELOC.)
IN THE CITY OF
WATERVILLE
KENNEBEC COUNTY
GIRDER ELEVATION
SHEET 17 OF 23 SHEETS
AUGUSTA, MAINE

78-189

0 1 2 3 4 5 INCHES

B.P.R. REG. NO.	STATE	PROJECT NO.	SHEET NO.	TOTAL SHEETS
1	MAINE	I-95-6 (23)	25	32

WATERVILLE
INTERSTATE

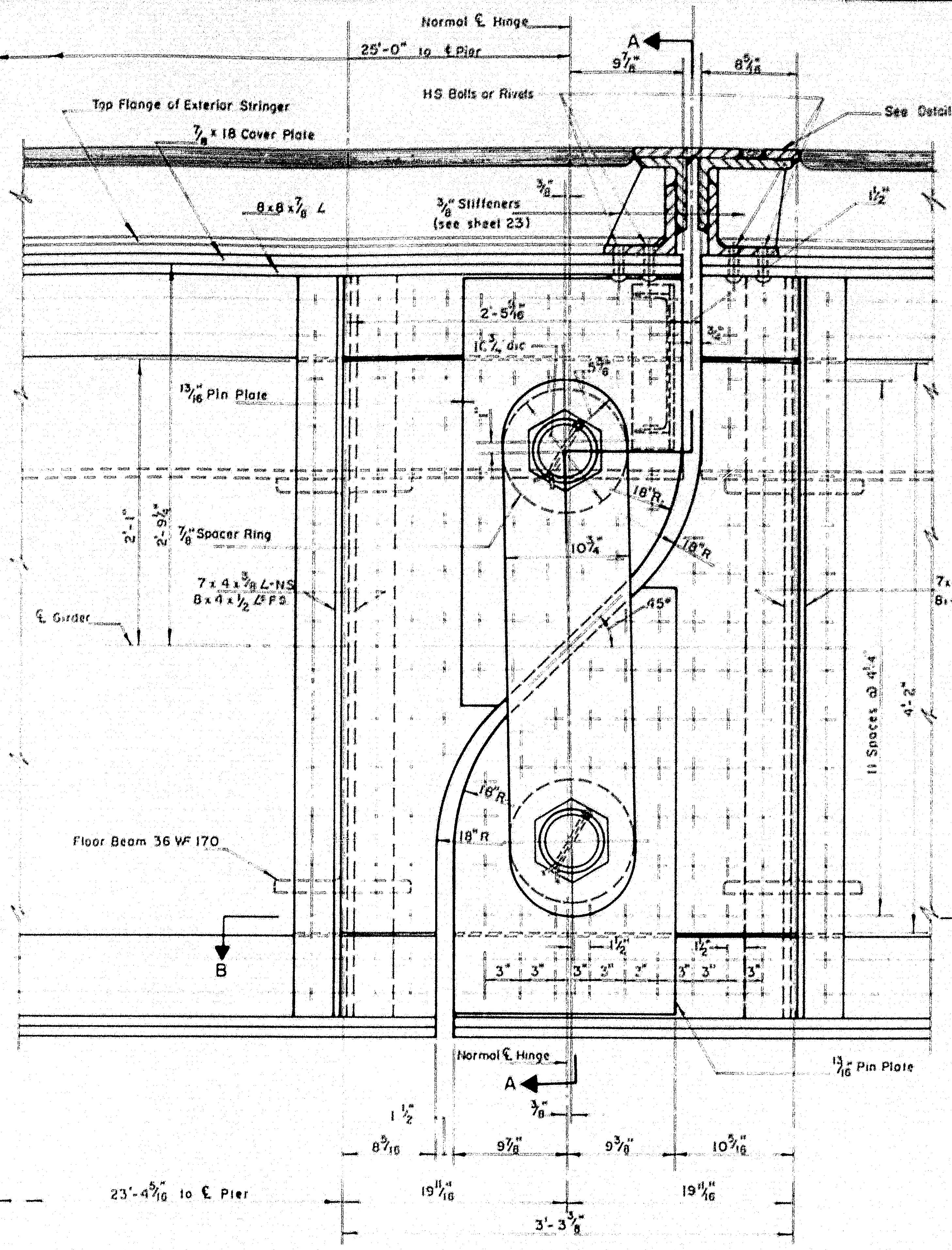
Normal ℄ Hinge
25'-0" to ℄ Pier
A
9 7/8"
8 5/16"
HS Bolts or Rivets
See Detail Sheet 23
Top Flange of Exterior Stringer
7/8" x 18 Cover Plate
8 x 8 x 7/8 ∠
3/8" Stiffeners (see sheet 23)
1/2"
2'-5 9/16"
13/16" Pin Plate
7/8" Spacer Ring
7 x 4 x 3/8 ∠-NS
8 x 4 x 1/2 ∠FS
℄ Girder
2'-1"
2'-9 3/4"
10 3/4
18"R
45°
11 Spaces @ 4" = 4'-2"
7 x 4 x 3/8 ∠ NS
8 x 4 x 1/2 ∠ FS
Floor Beam 36 WF 170
16"R
18"R
B
3"
1 1/2"
Normal ℄ Hinge
13/16" Pin Plate
1 1/2"
8 5/16
9 7/8"
9 7/8"
10 5/16"
23'-4 5/16 to ℄ Pier
19 11/16
19 11/16"
3'-3 3/8"

HINGE DETAIL

Scale: 1 1/2" = 1'-0"

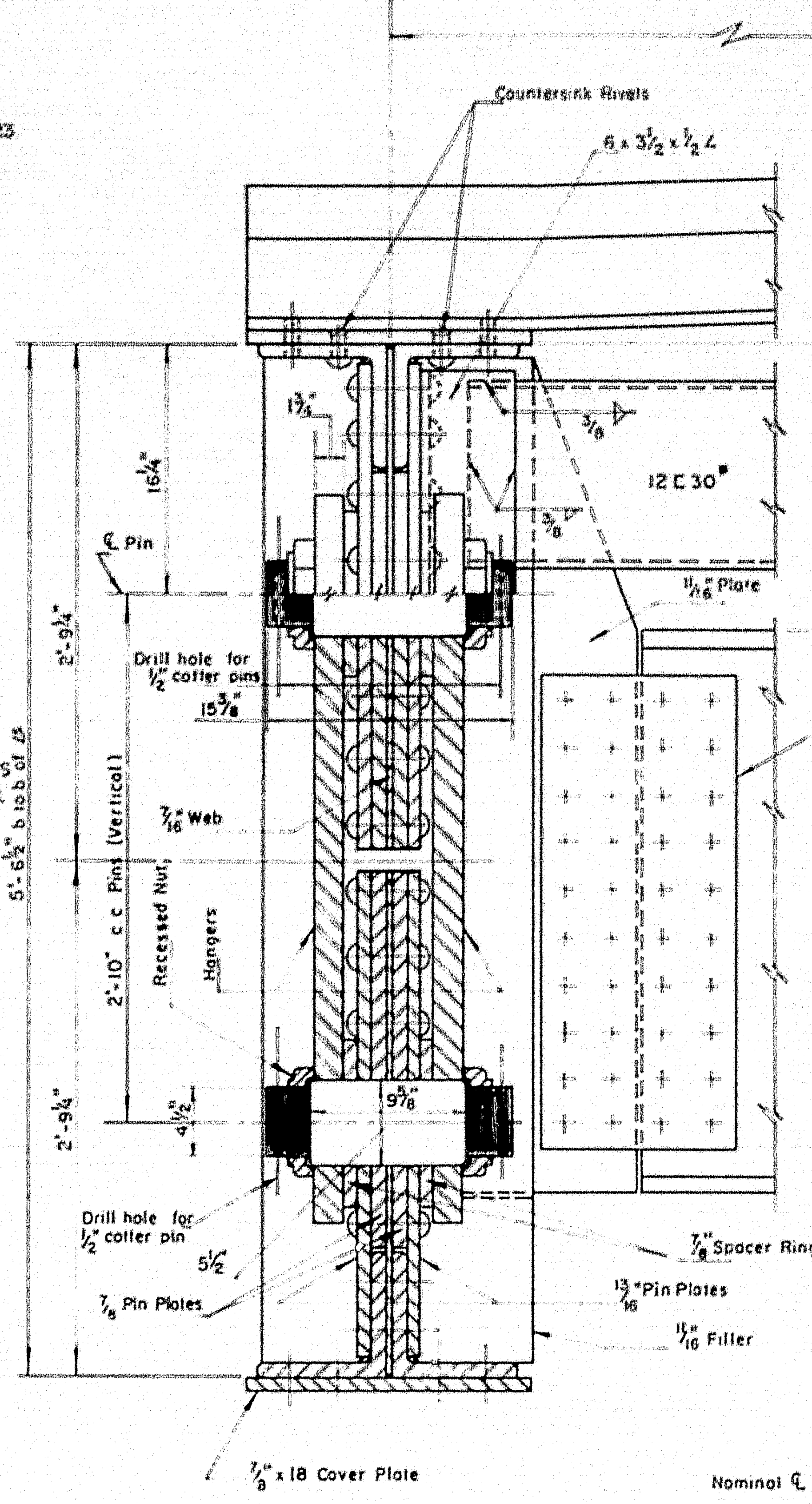
12'-0"
Countersink Rivets
6 x 3 1/2 x 1/2 ∠
12 C 30#
℄ Pin
11/16" Plate
16 1/4
5'-6 3/4" b. to b. of ∠s
2'-9 1/4"
Drill hole for 1/2" cotter pins
15 3/8"
7/16" Web
2'-10" c.c. Pins (Vertical)
Recessed Nut
Hangers
2-3/8" connection plates
9 5/8
2'-9 1/4"
Drill hole for 1/2" cotter pin
5 1/2"
7/8 Pin Plates
7/8" Spacer Rings
13/16" Pin Plates
11/16" Filler
7/8" x 18 Cover Plate

SECTION A-A

Scale: 1 1/2" = 1'-0"

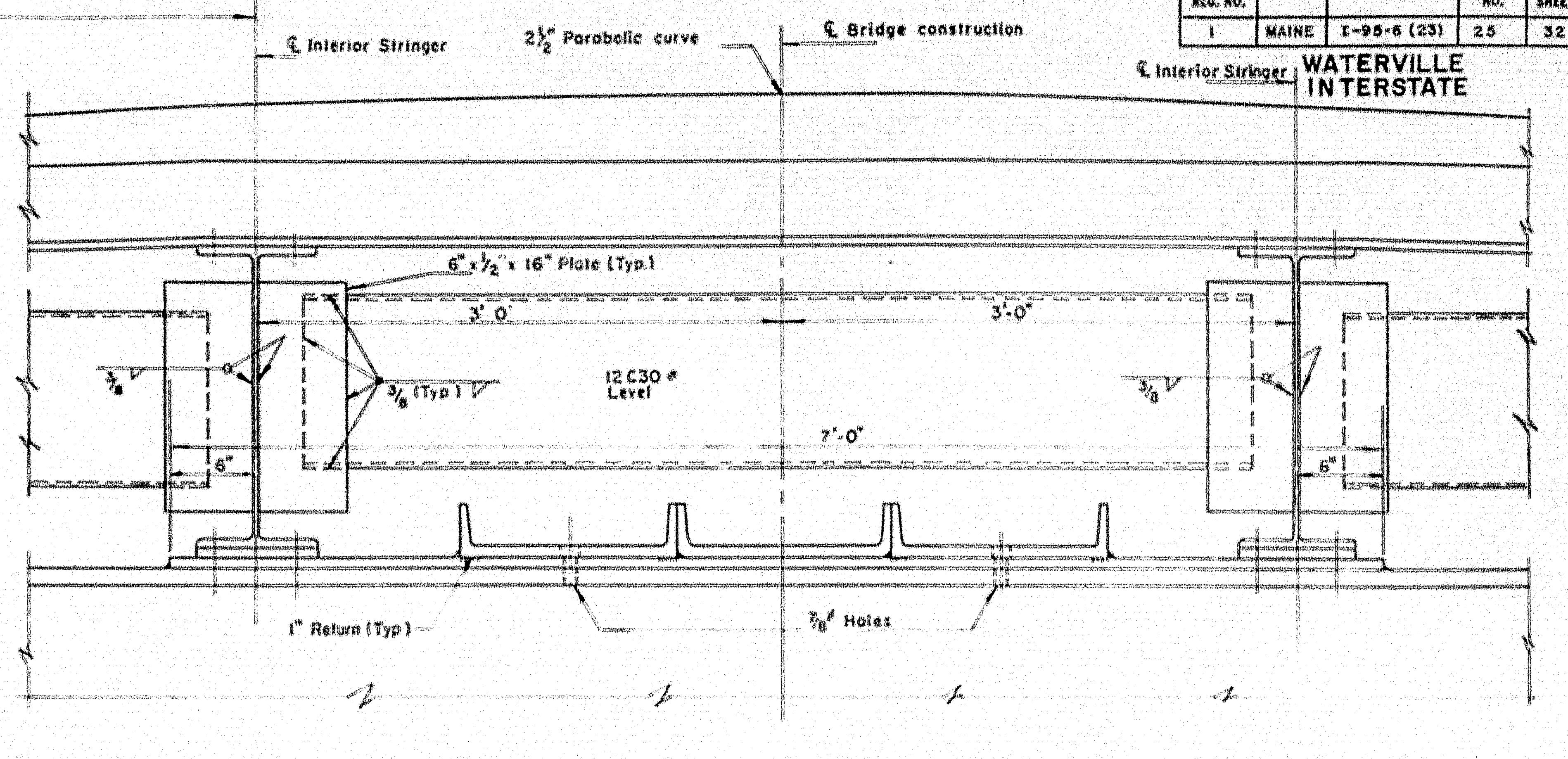
℄ Interior Stringer
2 1/2" Parabolic curve
℄ Bridge construction
℄ Interior Stringer
6" x 1/2" x 16" Plate (Typ.)
3'-0"
3'-0"
12 C 30# Level
7'-0"
3/8 (Typ.)
6"
6"
1" Return (Typ.)
7/8" Holes

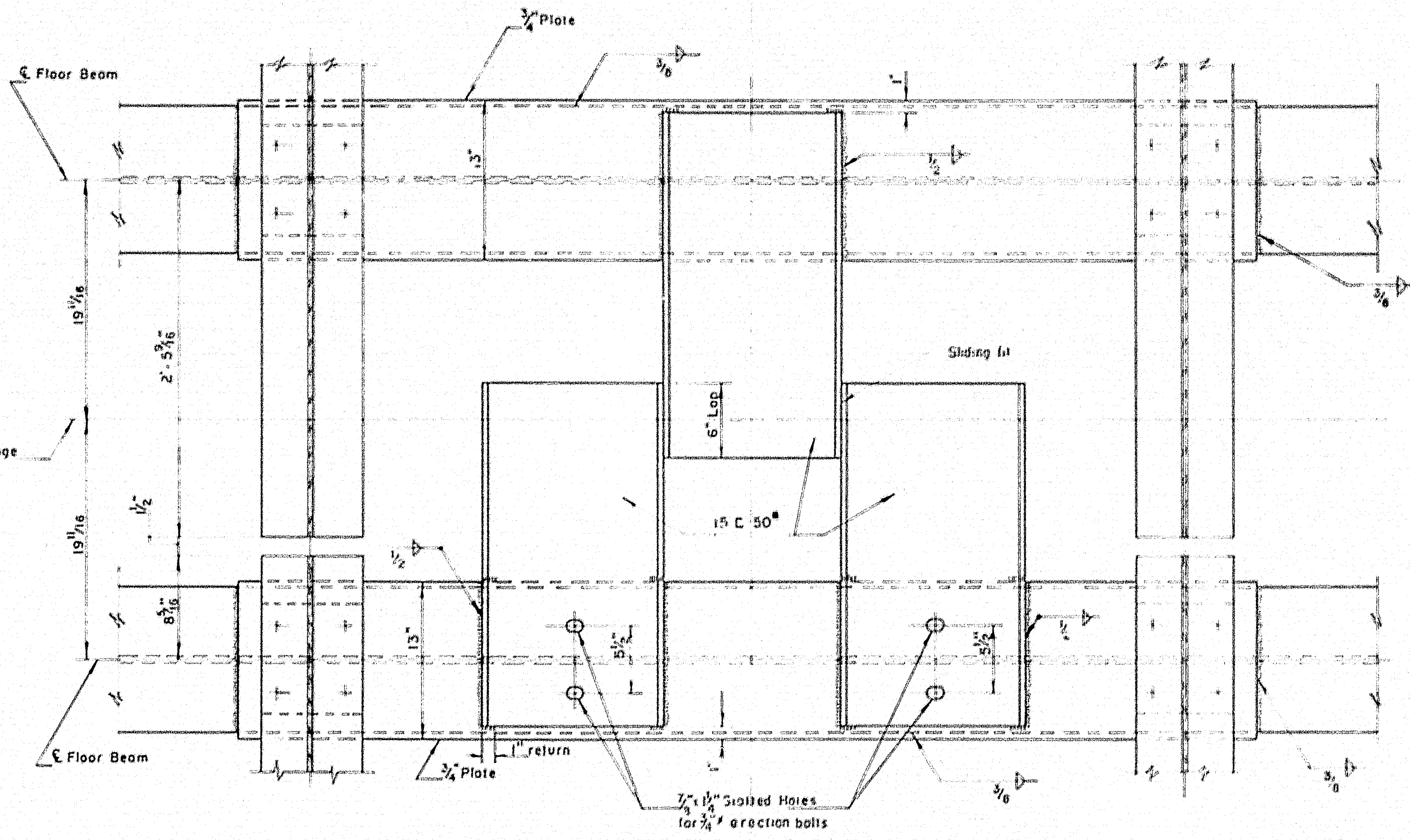
3/4" Plate
℄ Floor Beam
2'-5 9/16
19 11/16
19 11/16
Sliding fit
6" Lap
15 C 50#
8 5/16
13"
1/2
℄ Floor Beam
3/4" Plate
1" return
7/8" x 1 1/4" Slotted Holes for 3/4" erection bolts
Nominal ℄ Hinge

WIND TRANSFER DETAIL

Scale 1 1/2" = 1'-0"

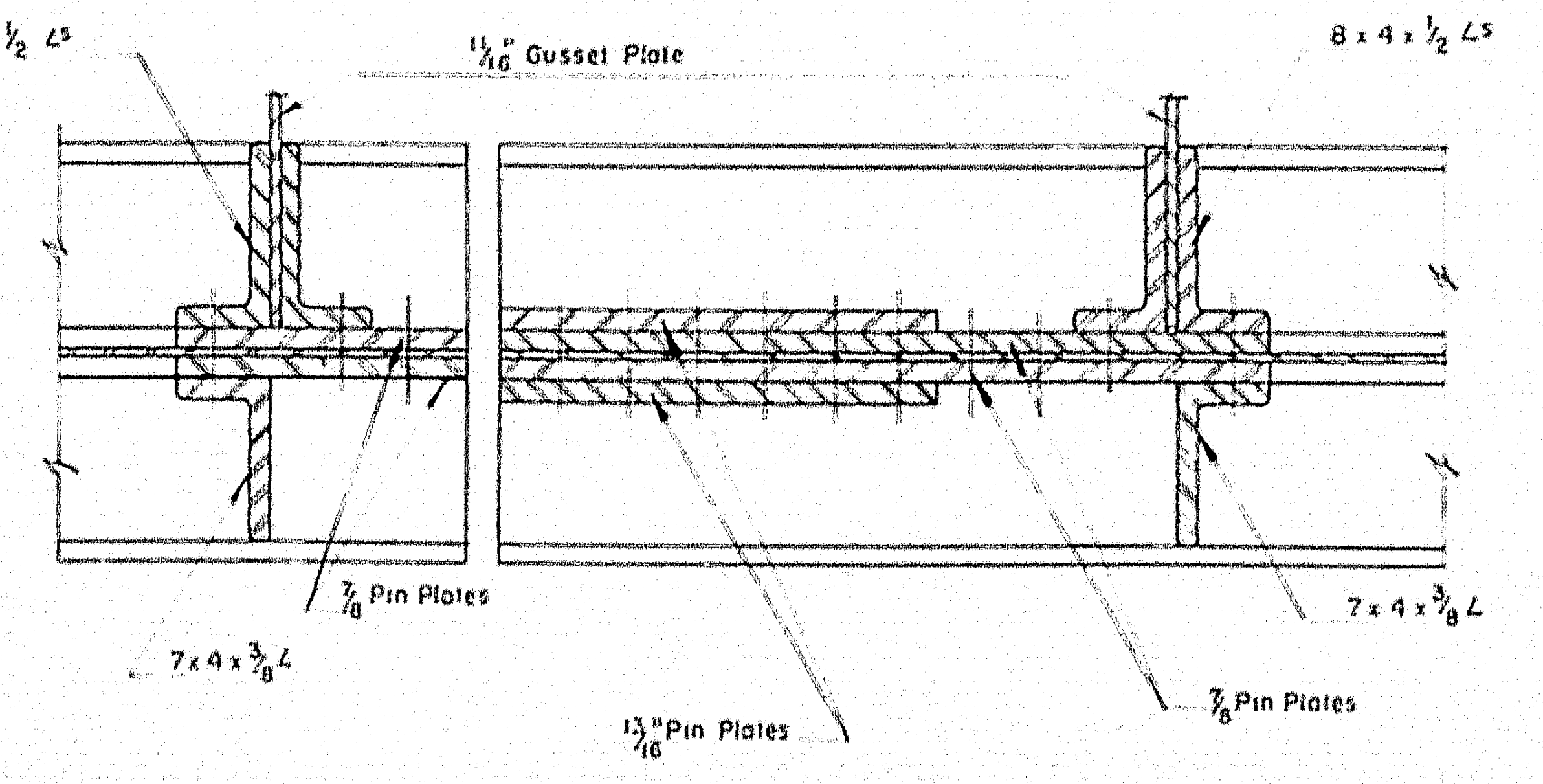
8 x 4 x 1/2 ∠s
11/16" Gusset Plate
8 x 4 x 1/2 ∠s
7/8 Pin Plates
7 x 4 x 3/8 ∠
13/16" Pin Plates
7/8 Pin Plates
7 x 4 x 3/8 ∠

SECTION B-B

Scale: 1 1/2" = 1'-0"

Notes: 1. Horizontal dimensions shown in Hinge Detail are @ 50° F under Full Dead Load.
2. At each Hinge 4 of 13/16" Pin Plates are identical & 4 of 7/8" Pin Plates are identical.
3. After the erection of all structural steel 2 of 15 C50#, at each end of suspended span, to be held parallel & bearing evenly against 15 C 50# at end of cantilever, in this position they are to be welded to 13" x 3/4" cover plate as shown.
4. The pin shall conform to A.S.T.M. Designation A108, any grade from 1016 to 1025 inclusive.

THE CLARKESON ENGINEERING CO., INC.

DESIGN R F DRAWN D E S	CHECK J M APPROVED W A H - C J M	BRIDGE NO. SURVEY PLOT

STATE HIGHWAY COMMISSION
INTERSTATE #95
OVER
MESSALONSKEE STREAM
& QUARRY ROAD (RELOC.)
IN THE CITY OF
WATERVILLE
KENNEBEC COUNTY
HINGE AND WIND TRANSFER DETAILS
SHEET 16 OF 23 SHEETS AUGUSTA, MAINE

78-190

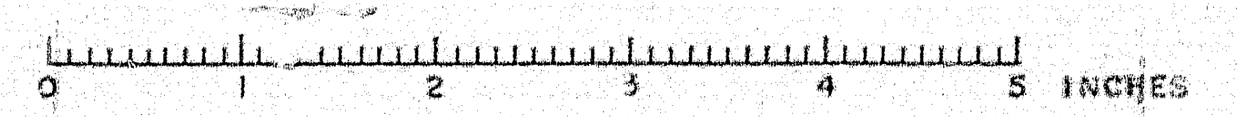
0
1
2
3
4
5 INCHES

B.P.R. REG. NO.	STATE	PROJECT NO.	SHEET NO.	TOTAL SHEETS
1	MAINE	I-95-6 (23)	26	32

WATERVILLE INTERSTATE

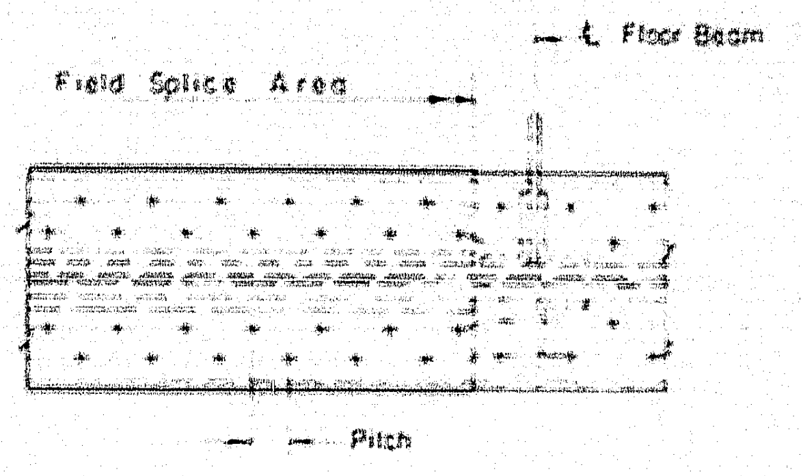
Field Splice Area
℄ Floor Beam
Pitch

RIVET ARRANGEMENT

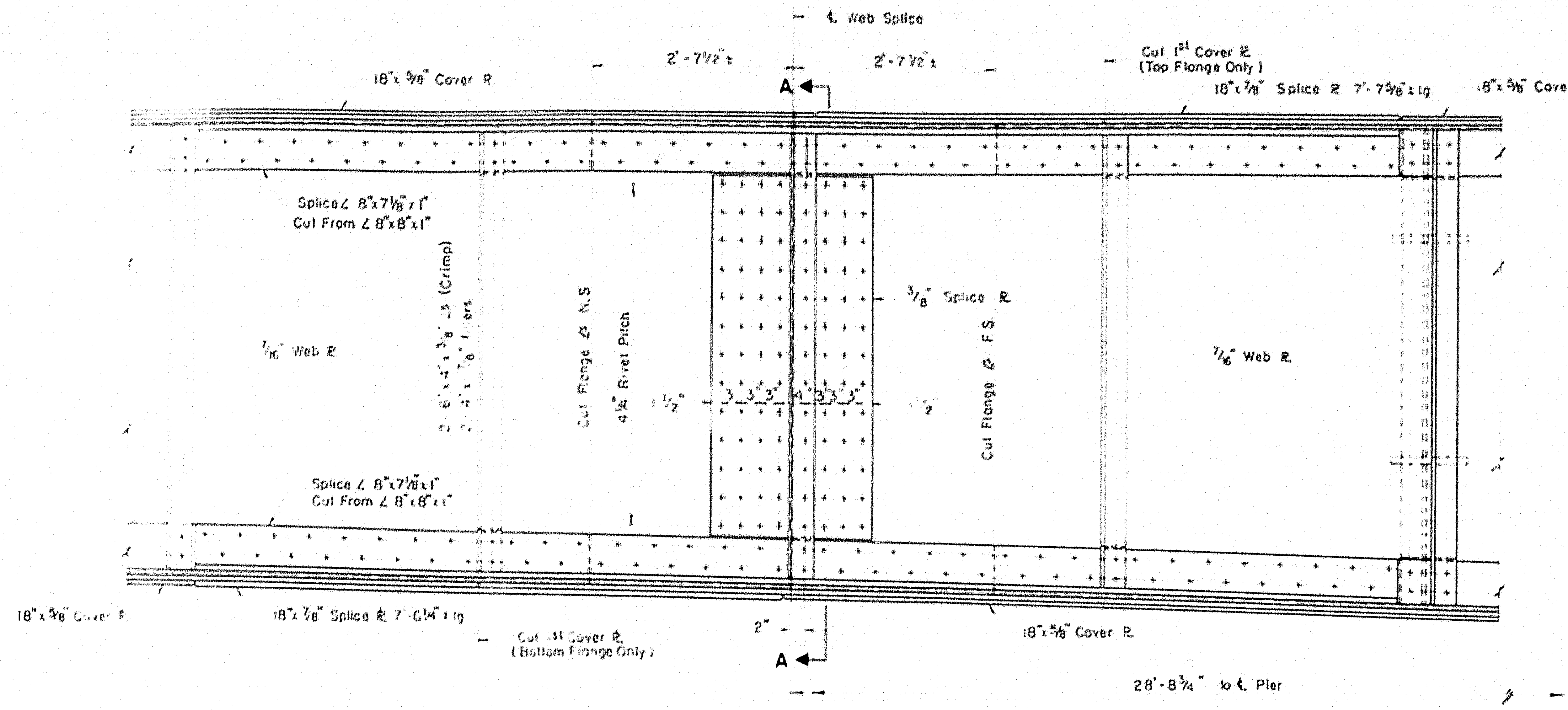
℄ Web Splice
2'-7½" ±
2'-7½" ±
Cut 1st Cover ℞ (Top Flange Only)
18"x ⅝" Cover ℞
18"x ⅞" Splice ℞ 7'-7⅝" ±lg
18"x ⅝" Cover ℞
A
Splice ∠ 8"x7⅛"x1"
Cut From ∠ 8"x8"x1"
6"x4"x½" ∠s (Crimp)
4½" Rivet Pitch
Cut Flange ∠ N.S
Cut Flange ∠ F.S
⅜" Splice ℞
7/16" Web ℞
7/16" Web ℞
1½"
Splice ∠ 8"x7⅛"x1"
Cut From ∠ 8"x8"x1"
18"x ⅝" Cover ℞
18"x ⅞" Splice ℞ 7'-6¼" ±lg
Cut 1st Cover ℞ (Bottom Flange Only)
2"
A
18"x ⅝" Cover ℞
28'-8¾" to ℄ Pier

FIELD SPLICE DETAIL

Scale: ¾" = 1'-0"

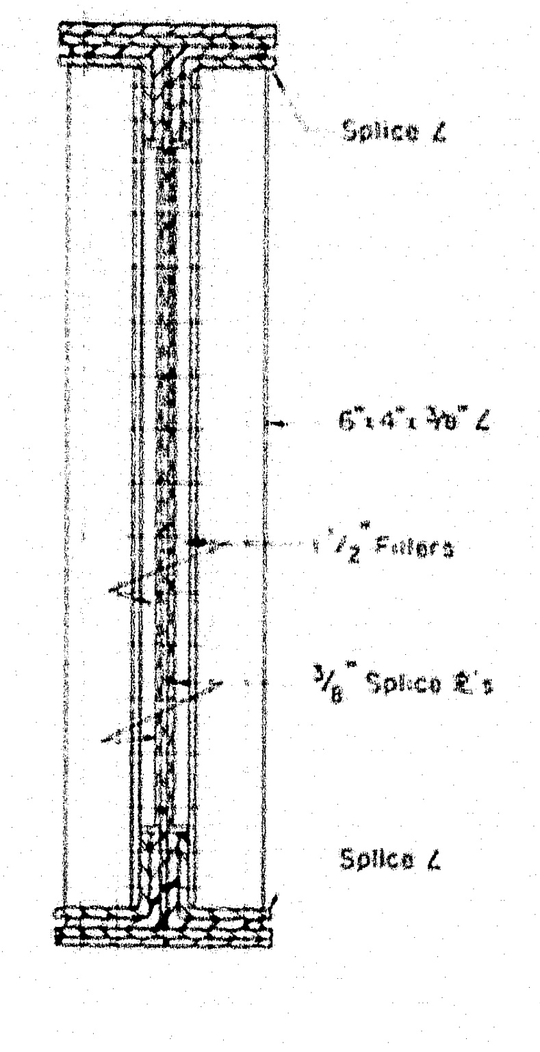
Splice ∠
6"x4"x⅜" ∠
1½" Fillers
⅜" Splice ℞'s
Splice ∠

SECTION A-A

Scale ¾" = 1'-0"

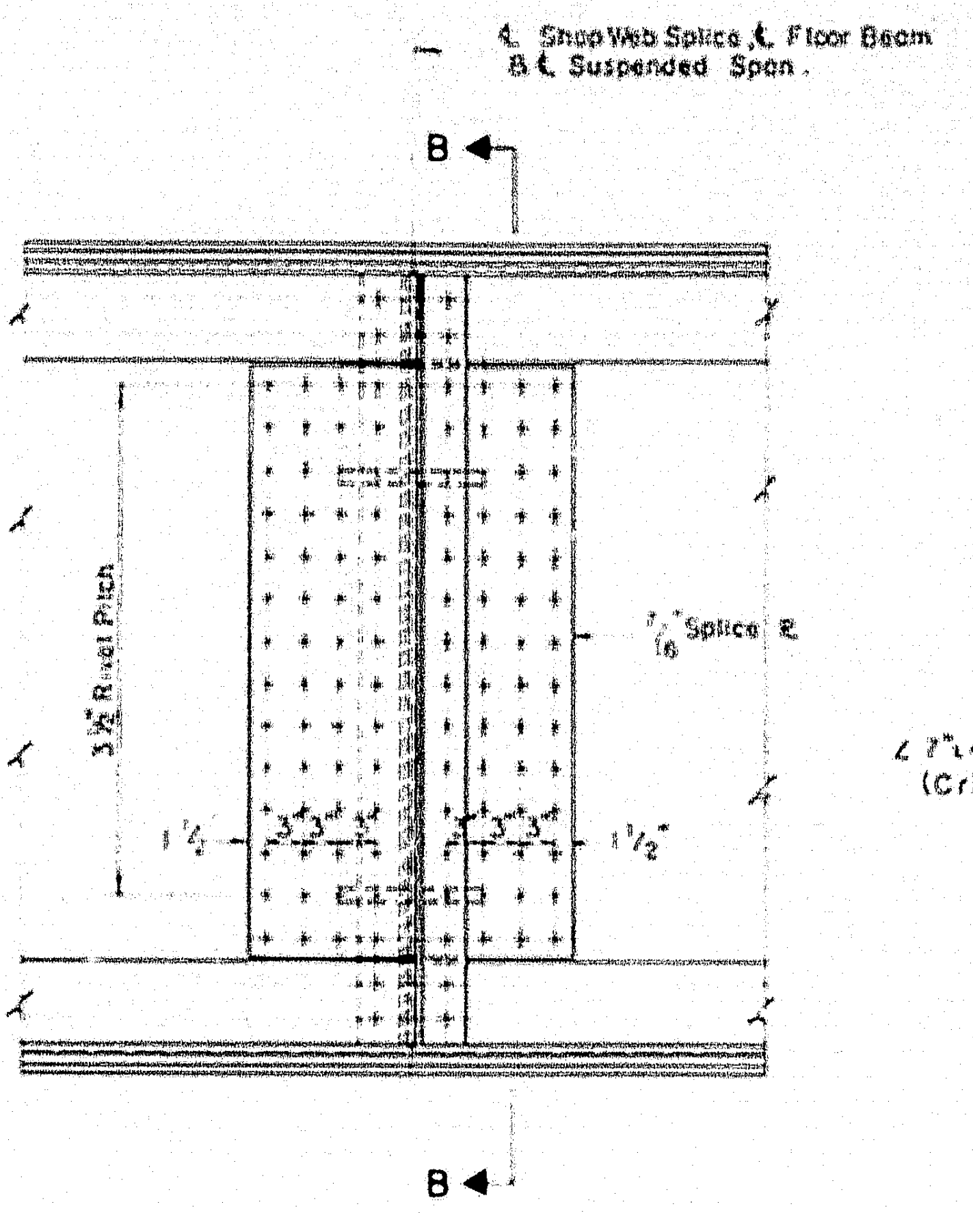
℄ Shop Web Splice ℄ Floor Beam & ℄ Suspended Span.
B
B
3½" Rivet Pitch
7/16" Splice ℞
1½"
1½"

SHOP WEB SPLICE DETAIL

Scale ¾" = 1'-0"

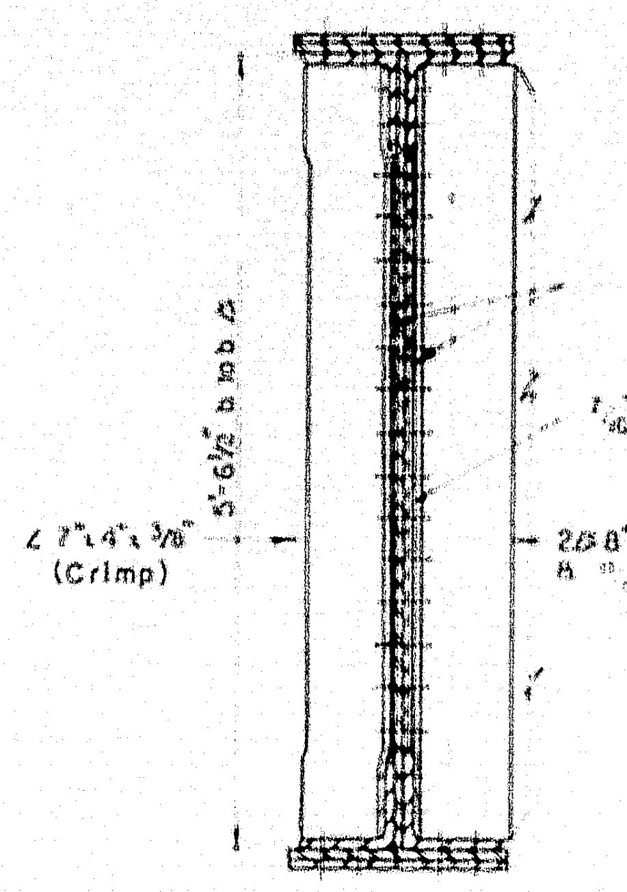
5'-6½" b. to b. ∠s
7/16" Splice ℞'s
7/16" Filler
∠ 7"x4"x⅜" (Crimp)
2 ∠s 8"x4"x½"
& 9/16" Gusset ℞

SECTION B-B

Scale ¾" = 1'-0"

Note For location of Sections 3-3 & 4-4 see Sheet 17

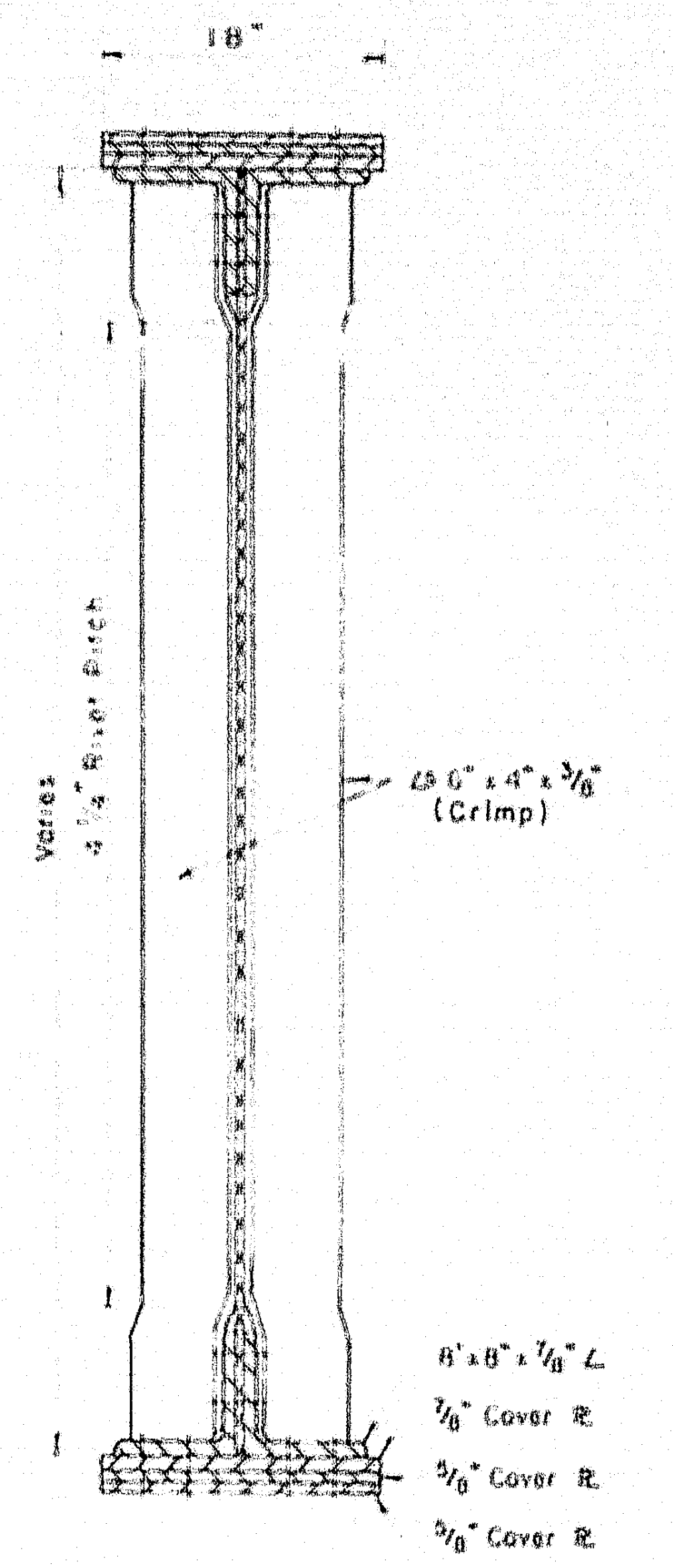
18"
7/16" Splice ℞'s
7/16" Filler
Varies
4½" Rivet Pitch
2 ∠s 6"x4"x⅜" (Crimp)
8"x8"x⅞" ∠
⅝" Cover ℞
⅝" Cover ℞
⅝" Cover ℞

SECTION 4-4

TYPICAL GIRDER SECTION

Scale 1" = 1'-0"

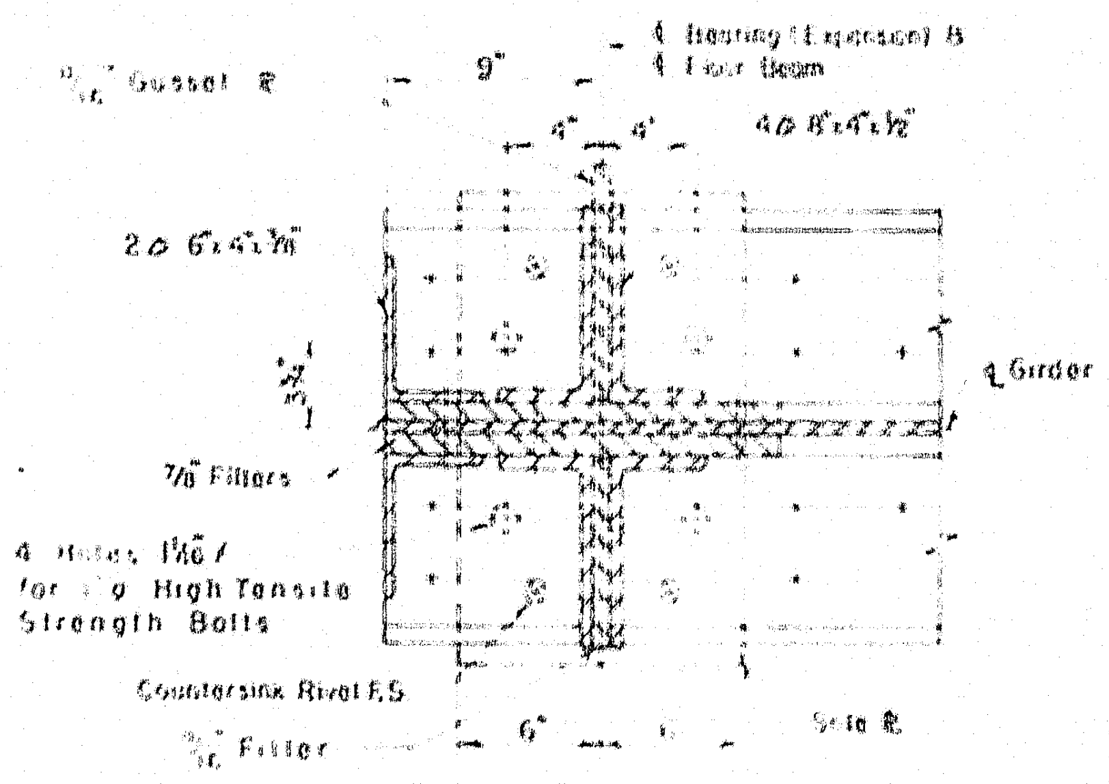
9/16" Gusset ℞
9"
℄ Bearing (Expansion) & ℄ Floor Beam
4"
4"
4 ∠s 8"x4"x½"
2 ∠s 6"x4"x⅞"
℄ Girder
⅞" Fillers
4 Holes 1 1/16" ⌀ for ⌀ High Tensile Strength Bolts
Countersink Rivet F.S.
9/16" Filler
6"
Sole ℞

SECTION 3-3

Scale 1½"

ELEVATION OF BOTTOM OF ROADWAY SLAB

Bm No.	℄ Bearings*	¼ Point	½ Point	¾ Point	℄ Bearings	Bm No.	℄ Bearings*	¼ Point	½ Point	¾ Point	℄ Bearings	Bm No.	℄ Bearings*	¼ Point	½ Point	¾ Point	℄ Bearings	Bm No.	℄ Bearings*	¼ Point	½ Point	¾ Point	℄ Bearing
1	159.79	160.01	160.19	160.31	160.40	21	164.28	164.83	165.34	165.80	166.21	41	157.86	158.05	158.19	158.26	158.30	61	161.46	161.94	162.37	162.76	163.10
2	159.98	160.21	160.39	160.51	160.59	22	164.48	165.03	165.54	165.99	166.40	42	158.07	158.25	158.36	158.46	158.49	62	161.65	162.13	162.57	162.95	163.29
3	[illegible]	160.29	160.47	160.59	160.67	23	164.56	165.11	165.62	166.07	166.48	43	158.15	158.33	158.47	158.54	158.57	63	161.73	162.21	162.65	163.03	163.37
4	159.98	160.21	160.39	160.51	160.59	24	164.48	165.03	165.54	165.99	166.40	44	158.07	158.25	158.38	158.46	158.49	64	161.65	162.13	162.57	162.95	163.29
5	159.79	160.01	160.19	160.31	160.40	25	164.28	164.83	165.34	165.80	166.21	45	157.88	158.05	158.19	158.26	158.30	65	161.46	161.94	162.37	162.76	163.10
6	160.41	160.71	160.97	161.18	161.35	26	166.25	166.88	167.47	168.01	168.51	46	158.31	158.56	158.77	158.92	159.03	66	163.13	163.68	164.20	164.66	165.08
7	160.60	160.91	161.17	161.37	161.54	27	166.44	167.07	167.67	168.20	168.70	47	158.50	158.75	158.96	159.11	159.22	67	163.32	163.88	164.40	164.85	165.26
8	160.68	160.99	161.25	161.46	161.62	28	166.52	167.16	167.75	168.28	168.78	48	158.58	158.83	159.05	159.20	159.30	68	163.40	163.96	164.48	164.93	165.35
9	160.60	160.91	161.17	161.37	161.54	29	166.44	167.07	167.67	168.20	168.70	49	158.50	158.75	158.96	159.11	159.22	69	163.32	163.88	164.40	164.85	165.26
10	160.41	160.71	160.97	161.18	161.35	30	166.25	166.88	167.47	168.01	168.51	50	158.31	158.56	158.77	158.92	159.03	70	163.13	163.68	164.20	164.66	165.08
11	161.37	161.75	162.09	162.38	162.63	31	168.55	169.26	169.94	170.56	171.14	51	159.05	159.37	159.66	159.89	160.08	71	165.11	165.74	166.33	166.87	167.35
12	161.56	161.94	162.29	162.58	162.82	32	168.74	169.46	170.14	170.75	171.33	52	159.24	159.57	159.86	160.08	160.27	72	165.30	165.94	166.53	167.06	167.55
13	161.64	162.02	162.37	162.66	162.90	33	168.82	169.54	170.22	170.83	171.41	53	159.32	159.65	159.94	160.16	160.35	73	165.38	166.02	166.61	167.14	167.63
14	161.56	161.94	162.29	162.58	162.82	34	168.74	169.46	170.14	170.75	171.33	54	159.24	159.57	159.86	160.08	160.27	74	165.30	165.94	166.53	167.06	167.55
15	161.37	161.75	162.09	162.38	162.63	35	168.55	169.26	169.94	170.56	171.14	55	159.05	159.37	159.66	159.89	160.08	75	165.11	165.74	166.33	166.87	167.35
16	162.66	163.12	163.55	163.92	164.25	36	171.19	171.97	172.72	173.41	174.06	56	160.10	160.50	160.86	161.17	161.43	76	167.40	168.09	168.74	169.34	169.85
17	162.85	163.32	163.75	164.12	164.44	37	171.38	172.17	172.92	173.61	174.26	57	160.29	160.69	161.06	161.36	161.62	77	167.59	168.29	168.94	169.53	170.08
18	162.93	163.40	163.83	164.20	164.52	38	171.46	172.25	173.00	173.69	174.34	58	160.37	160.78	161.14	161.44	161.70	78	167.68	168.37	169.02	169.61	170.16
19	162.85	163.32	163.75	164.12	164.44	39	171.38	172.17	172.92	173.61	174.26	59	160.29	160.69	161.06	161.36	161.62	79	167.59	168.29	168.94	169.53	170.08
20	162.66	163.12	163.55	163.92	164.25	40	171.19	171.97	172.72	173.41	174.06	60	160.10	160.50	160.86	161.17	161.43	80	167.40	168.09	168.74	169.34	169.85

* Low station end of beam.

Note. After the structural steel is erected and before forms are built or concrete is placed, elevations on the top flange of the beams are to be obtained at the points indicated in the table. The difference between these elevations and those shown in the table give the actual blocking distance from top of beam to bottom of slab. See Haunch Detail sheet 16.

ELEVATION OF BOTTOM OF ROADWAY SLAB

SOUTHBOUND BRIDGE				NORTHBOUND BRIDGE			
STATION	15'-0" LT. & RT.	9'-0" LT. & RT.	3'-0" LT. & RT.	STATION	15'-0" LT. & RT.	9'-0" LT. & RT.	3'-0" LT. & RT.
1048+70.00	160.76	160.91	161.02	1047+60.00	159.34	159.50	159.60
1048+80.20	160.67	160.82	160.93	1047+70.20	159.24	159.40	159.50
1048+90.40	160.58	160.74	160.84	1047+80.40	159.15	159.30	159.40
1049+00.60	160.49	160.65	160.75	1047+90.60	159.05	159.20	159.31
1049+10.80	160.41	160.56	160.66	1048+00.80	158.95	159.11	159.21
1049+21.01	160.32	160.47	160.57	1048+11.00	158.85	159.00	159.11
1049+31.21	160.23	160.38	160.48	1048+21.20	158.75	158.90	159.01
1049+41.41	160.14	160.29	160.40	1048+31.40	158.65	158.81	158.91
1049+51.61	160.06	160.21	160.31	1048+41.60	158.56	158.71	158.82
1049+61.81	159.98	160.13	160.24	1048+51.80	158.47	158.62	158.72
1049+72.00	159.91	160.07	160.17	1048+62.00	158.39	158.55	158.65
1049+83.68	159.85	160.00	160.11	1048+73.68	158.32	158.47	158.57
1049+95.36	159.80	159.96	160.06	1048+85.36	158.25	158.40	158.51
1049+98.04	159.79	159.95	160.05	1048+88.04	158.24	158.39	158.50
1050+08.58	159.77	159.93	160.03	1048+98.58	158.21	158.36	158.46
1050+19.32	159.75	159.91	160.01	1049+09.32	158.17	158.32	158.43
1050+29.66	159.73	159.89	159.99	1049+19.66	158.14	158.29	158.39
1050+40.00	159.71	159.86	159.97	1049+30.00	158.10	158.25	158.35
1050+50.34	159.68	159.83	159.94	1049+40.34	158.05	158.20	158.31
1050+60.68	159.64	159.79	159.90	1049+50.68	158.00	158.15	158.25
1050+71.02	159.60	159.76	159.86	1049+61.02	157.95	158.10	158.20
1050+81.36	159.56	159.72	159.82	1049+71.36	157.89	158.05	158.15
1050+84.64	159.56	159.71	159.82	1049+74.64	157.88	158.04	158.14
1050+96.32	159.54	159.70	159.80	1049+86.32	157.84	158.00	158.10
1051+08.00	159.54	159.70	159.80	1049+98.00	157.82	157.98	158.08
1051+18.20	159.55	159.70	159.81	1050+08.20	157.82	157.97	158.07
1051+28.40	159.57	159.72	159.83	1050+18.40	157.82	157.97	158.08
1051+38.60	159.60	159.75	159.86	1050+28.60	157.83	157.98	158.09
1051+48.80	159.63	159.78	159.89	1050+38.80	157.84	158.00	158.10
1051+59.00	159.66	159.82	159.92	1050+49.00	157.86	158.01	158.11
1051+69.20	159.70	159.85	159.96	1050+59.20	157.87	158.02	158.13
1051+79.40	159.73	159.88	159.99	1050+69.40	157.88	158.04	158.14
1051+89.60	159.76	159.92	160.02	1050+79.60	157.90	158.05	158.15
1051+99.80	159.79	159.95	160.05	1050+89.80	157.90	158.06	158.16
1052+10.00	159.83	159.98	160.08	1051+00.00	157.92	158.07	158.18

THE CLARKESON [illegible] CO., INC

DESIGN R.F.
DRAWN E.K.

STATE HIGHWAY COMMISSION

INTERSTATE #95

OVER

MESSALONSKEE STREAM
& QUARRY ROAD (RELOC.)

IN THE CITY OF

WATERVILLE
KENNEBEC COUNTY

SPLICE DETAILS & SECTIONS

SHEET 19 OF 23 SHEETS AUGUSTA, MAINE

78-191

0 1 2 3 4 5 INCHES

B.P.R. REG. NO.	STATE	PROJECT NO.	SHEET NO.	TOTAL SHEETS
1	MAINE	I-95-6(23)	27	32

WATERVILLE INTERSTATE

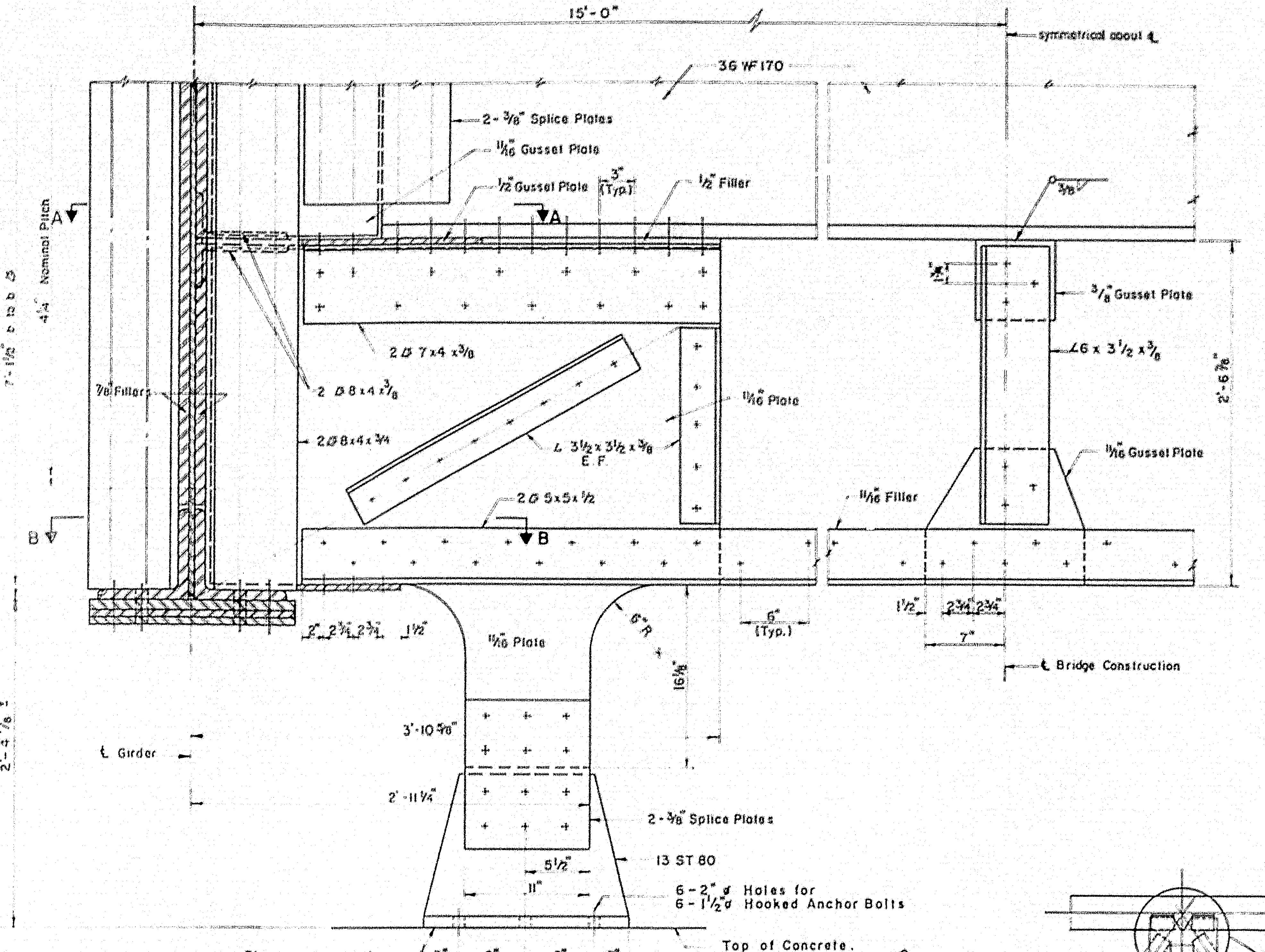
15'-0"
36 WF 170
symmetrical about ℄
2-3/8" Splice Plates
11/16 Gusset Plate
1/2 Gusset Plate
3" (Typ.)
1/2" Filler
A
3/8
3/8 Gusset Plate
∠6 x 3 1/2 x 3/8
11/16 Gusset Plate
2-6 7/8
2 ∠ 7x4 x 3/8
2 ∠ 8x4 x 3/8
2 ∠ 8x4x 3/4
7/8 Fillers
4 1/4 Nominal Pitch
∠ 3 1/2 x 3 1/2 x 3/8 E.F.
11/16 Plate
2 ∠ 5x5x1/2
11/16 Filler
B
6" (Typ.)
1 1/2
2 3/4 2 3/4
7"
℄ Bridge Construction
11/16 Plate
6" R
16 1/8
3'-10 5/8"
2'-11 1/4"
℄ Girder
2'-4 7/8"
2-3/8" Splice Plates
13 ST 80
5 1/2
11"
6-2" ∅ Holes for
6-1 1/2" ∅ Hooked Anchor Bolts

Shim as required
3" 6" 6" 3"
18"
Top of Concrete.

SECTION 2-2

Scale: 1 1/2" = 1'-0"

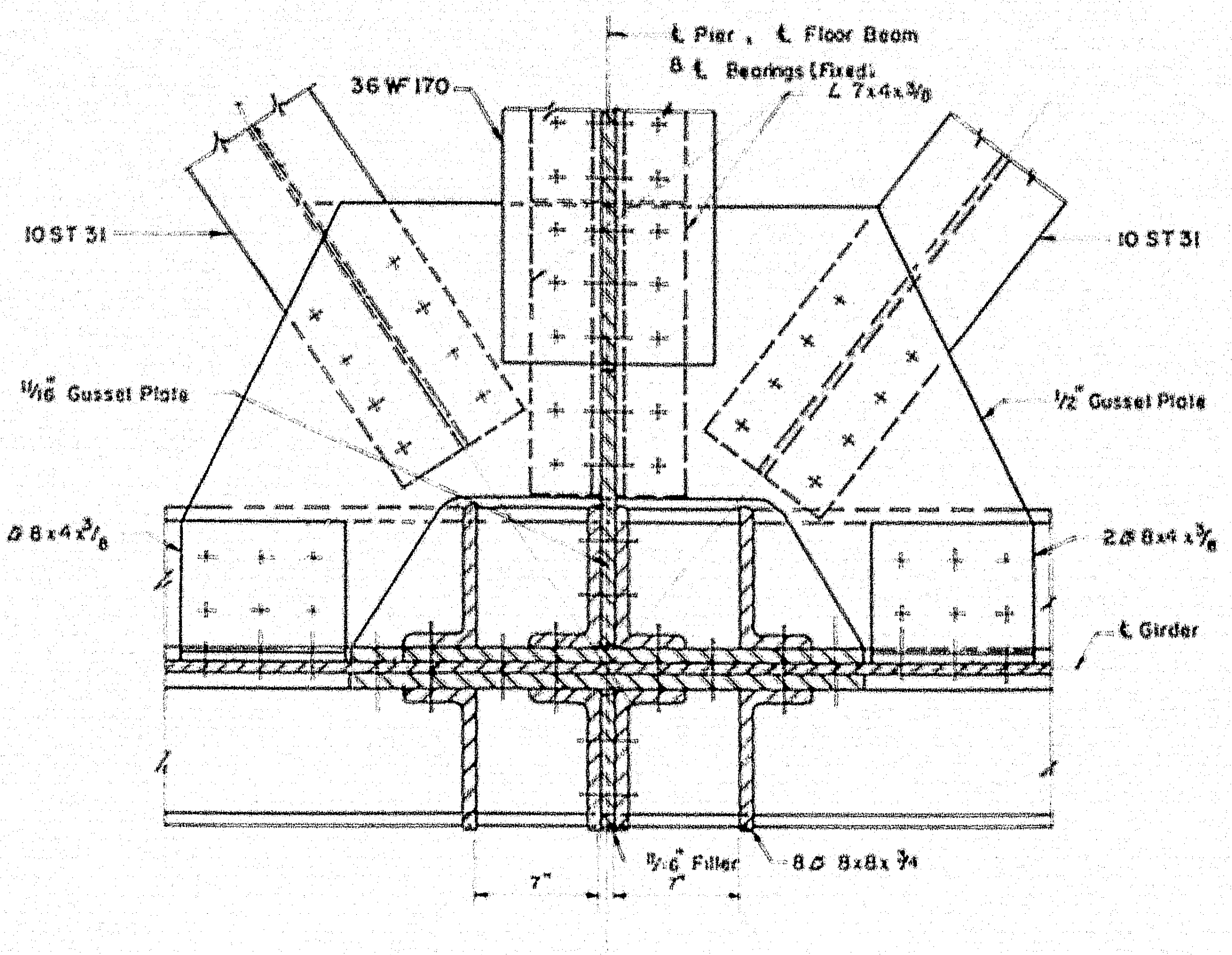
℄ Pier, ℄ Floor Beam
& ℄ Bearings (Fixed)
∠ 7x4x3/8
36 WF 170
10 ST 31
10 ST 31
11/16 Gusset Plate
1/2" Gusset Plate
2 ∠ 8x4x3/8
2 ∠ 8x4 x 3/8
℄ Girder
7"
11/16" Filler
8 ∠ 8x8x3/4

SECTION A-A

Scale: 1 1/2" = 1'-0"

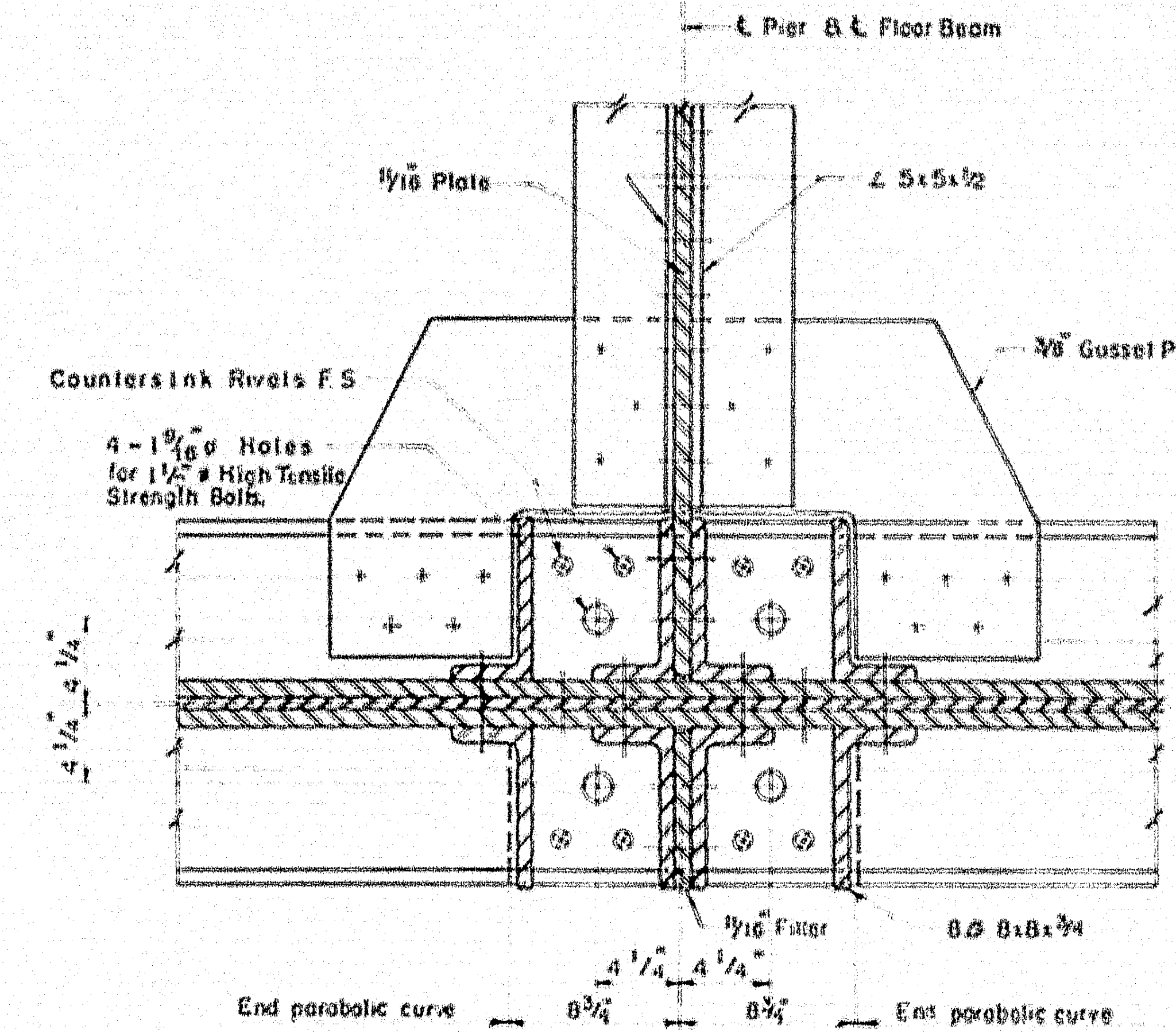
℄ Pier & ℄ Floor Beam
11/16 Plate
∠ 5x5x1/2
3/8" Gusset Plate
Countersink Rivets F.S.
4-1 9/16" ∅ Holes
for 1 1/2" ∅ High Tensile
Strength Bolts.
℄ Girder
4 1/2 4 1/2
11/16" Filler
8 ∠ 8x8x3/4
4 1/4 4 1/4
8 3/4 8 3/4
End parabolic curve
End parabolic curve

SECTION B-B

Scale: 1 1/2" = 1'-0"

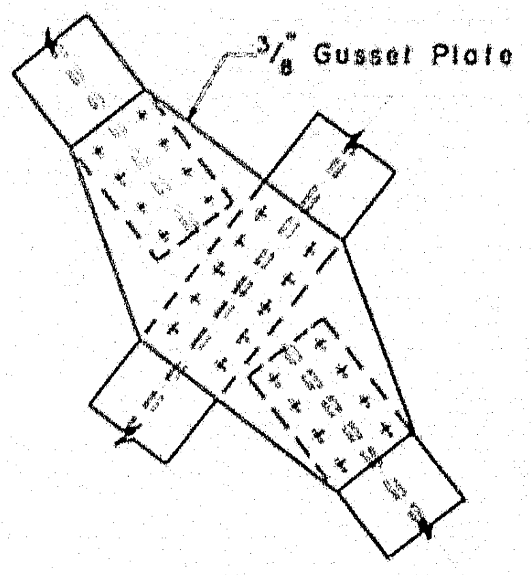
3/8 Gusset Plate

DETAIL D

Scale: 3/4" = 1'-0"

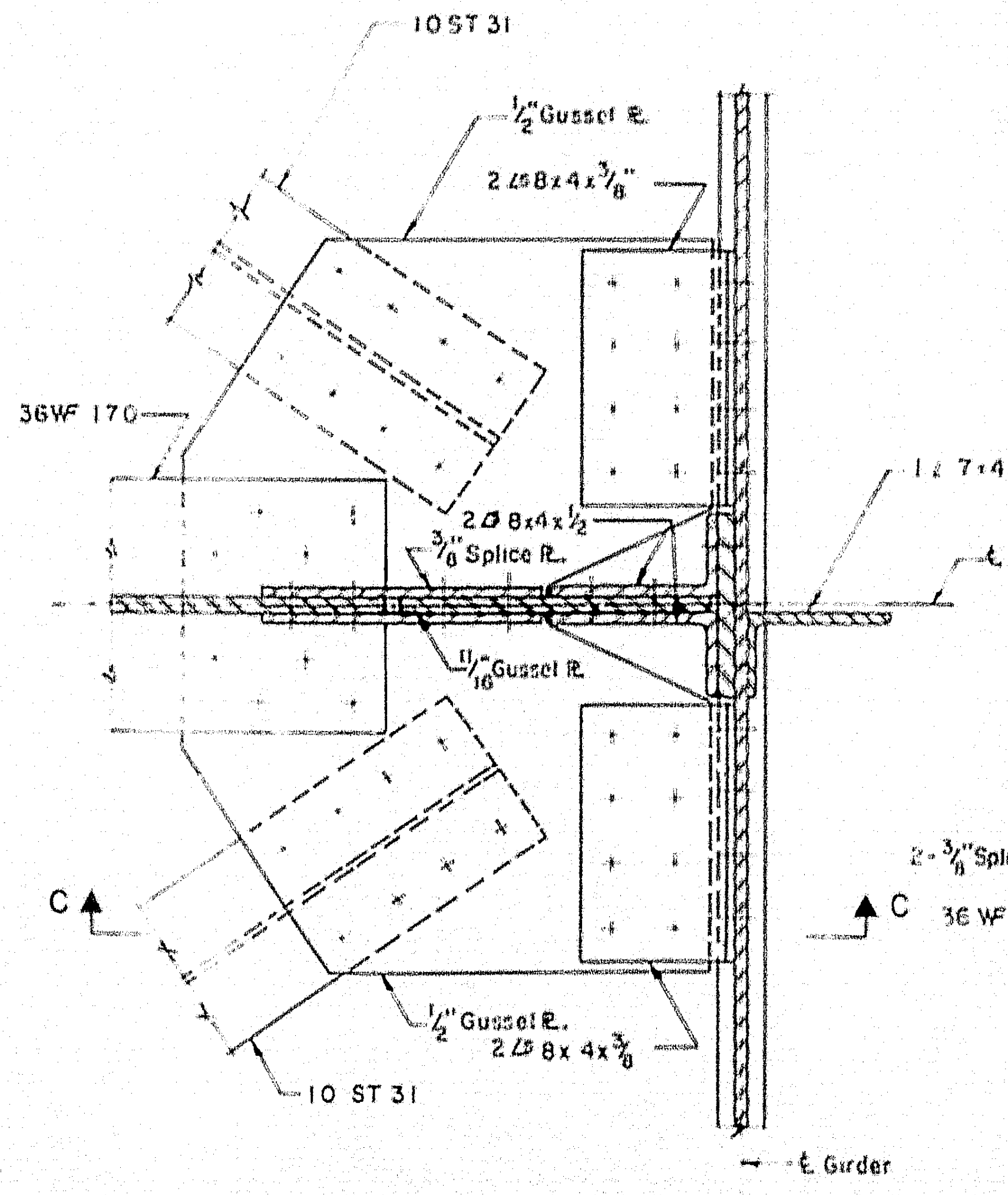
10 ST 31
1/2" Gusset Pl.
2 ∠ 8x4x3/8
36 WF 170
∠ 7x4x3/8 (crimped)
2 ∠ 8x4x1/2
3/8 Splice Pl.
11/16 Gusset Pl.
℄ Floor Beam
C
1/2" Gusset Pl.
2 ∠ 8x 4x3/8
10 ST 31
℄ Girder

TYPICAL INTERMEDIATE CONNECTION DETAIL
BOTTOM LATERAL BRACING

Scale: 1 1/2" = 1'-0"

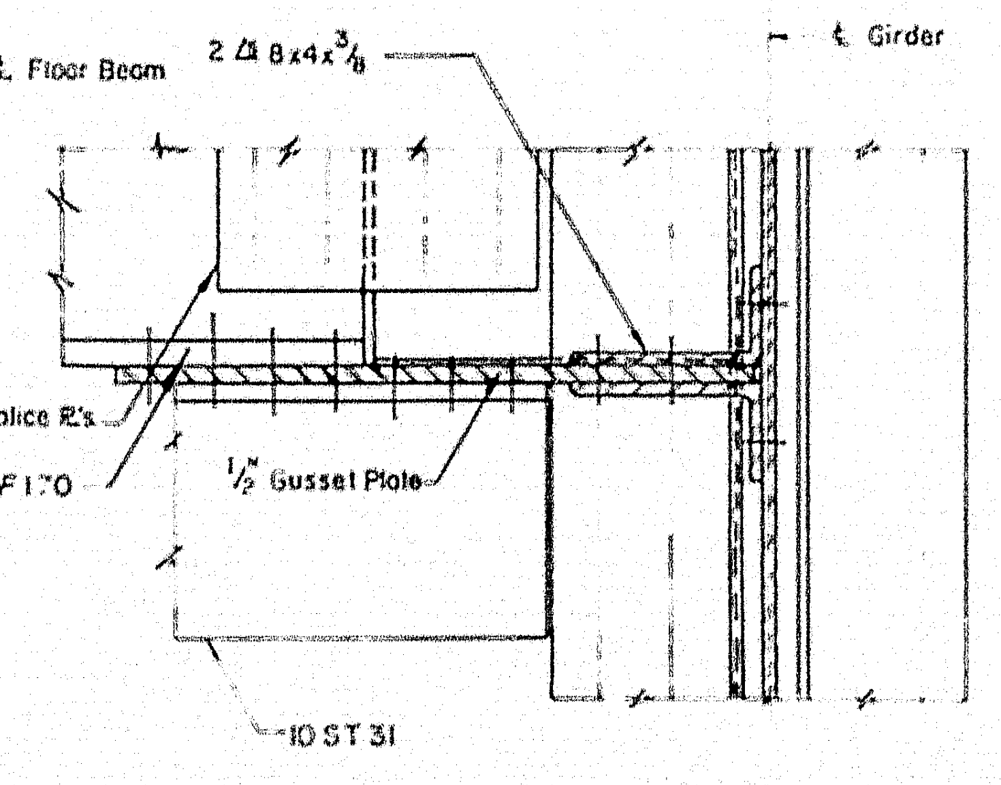
℄ Girder
2 ∠ 8x4x3/8
2-3/8" Splice Pl's.
C
36 WF 170
1/2" Gusset Plate
10 ST 31

SECTION C-C

Scale: 1 1/2" = 1'-0"

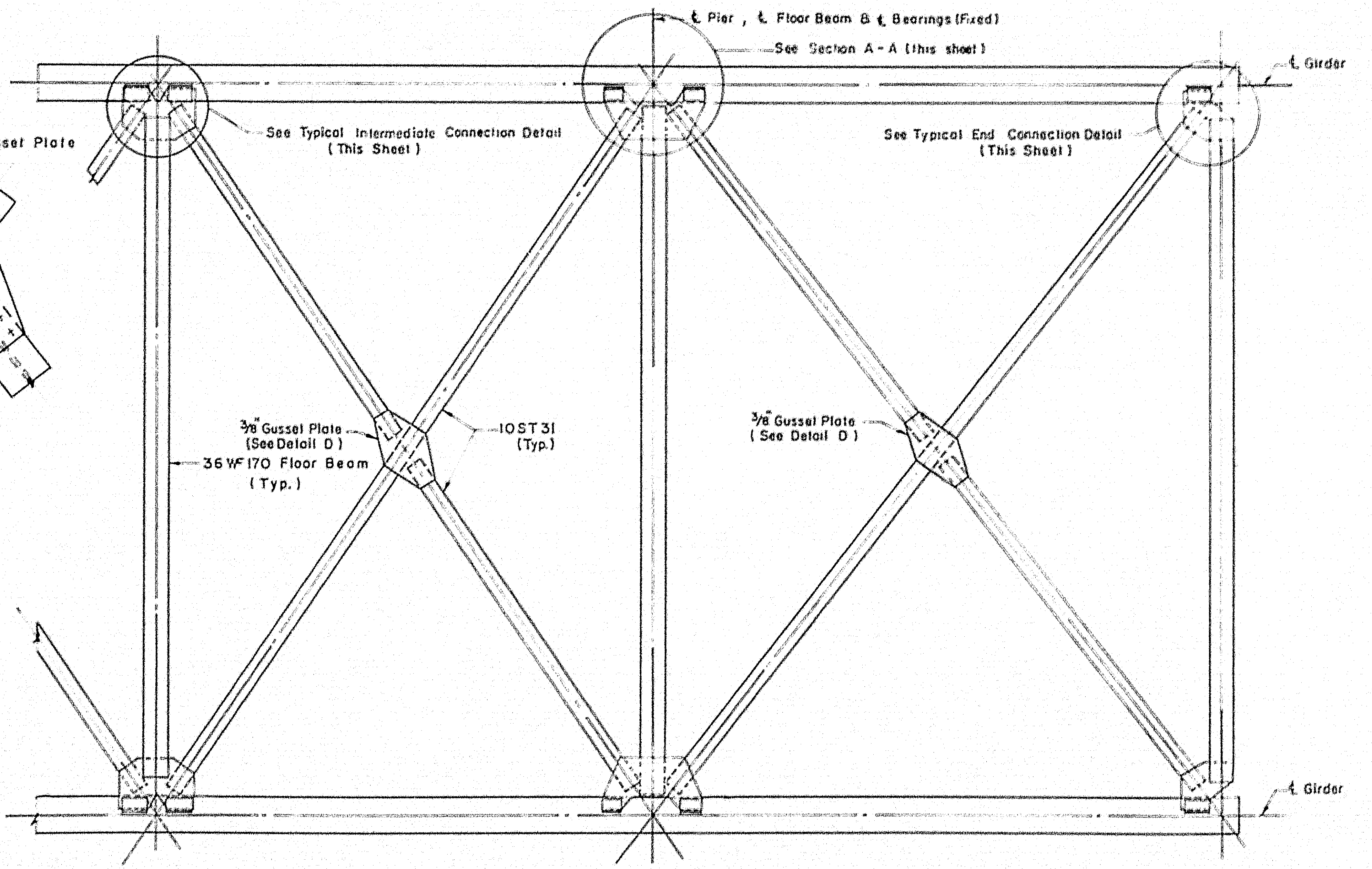
℄ Pier, ℄ Floor Beam & ℄ Bearings (Fixed)
See Section A-A (this sheet)
℄ Girder
See Typical Intermediate Connection Detail (This Sheet)
See Typical End Connection Detail (This Sheet)
3/8 Gusset Plate (See Detail D)
36 WF 170 Floor Beam (Typ.)
10 ST 31 (Typ.)
3/8 Gusset Plate (See Detail D)
30'-0"
℄ Girder

ARRANGEMENT BOTTOM LATERAL BRACING

Scale: 1/4" = 1'-0"

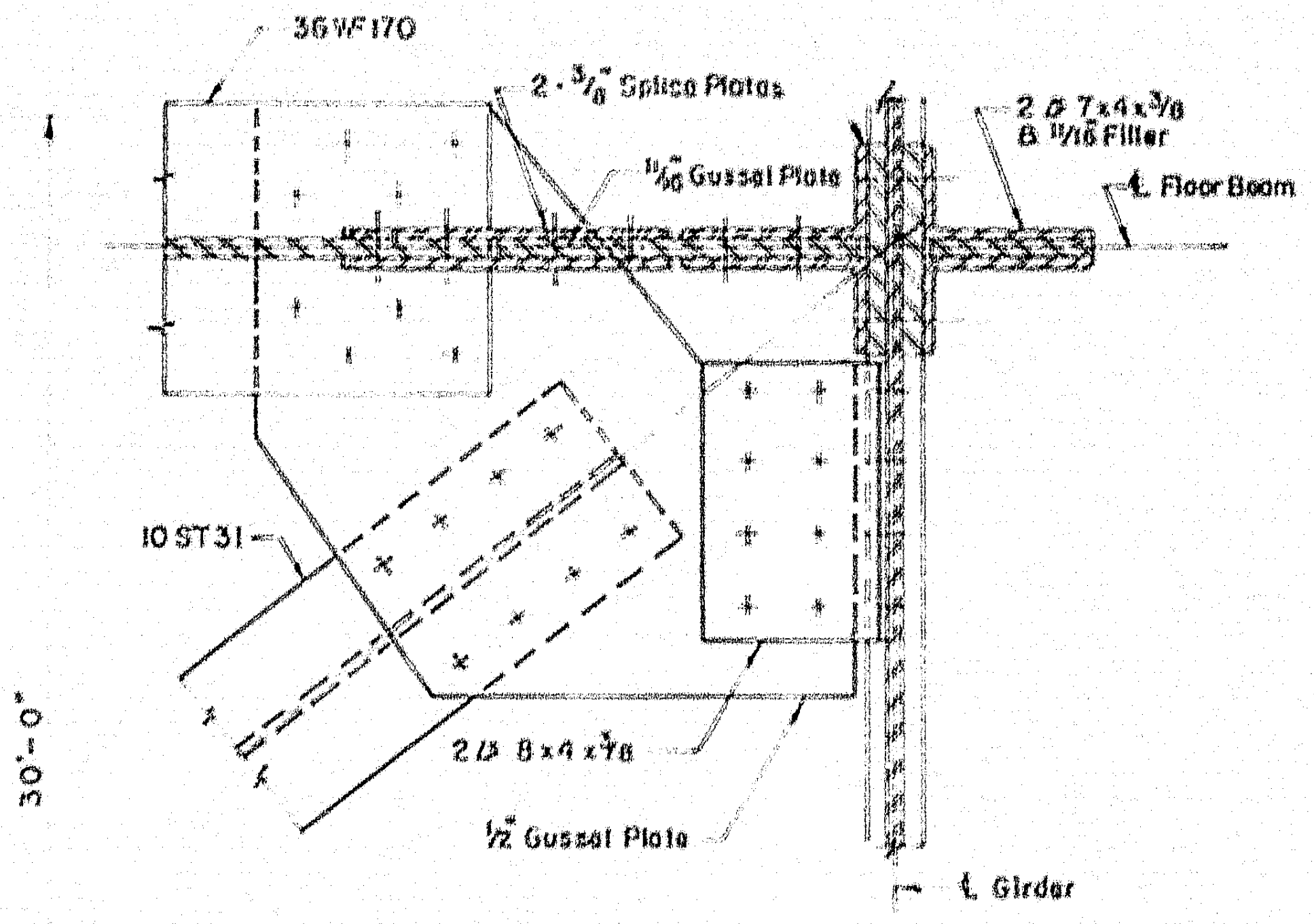
2 ∠ 8x4 x 1/2
36 WF 170
2-3/8 Splice Plates
2 ∠ 7x4x3/8
& 11/16 Filler
11/16 Gusset Plate
℄ Floor Beam
10 ST 31
2 ∠ 8x4x3/8
1/2 Gusset Plate
℄ Girder

TYPICAL END CONNECTION DETAIL
BOTTOM LATERAL BRACING

Scale 1 1/2

THE CLARKESON ENGINEERING CO. INC.

DESIGN R. F.	CHECK J. F. M.	BRIDGE NO.
		SURVEY
DRAWN E. K.	APPROVE WAH - CJM	PLOT

STATE HIGHWAY COMMISSION

INTERSTATE #95
OVER
MESSALONSKEE STREAM
& QUARRY ROAD (RELOC.)
IN THE CITY OF
WATERVILLE
KENNEBEC COUNTY
BRACING & CONNECTION DETAILS

SHEET 20 OF 23 SHEETS
AUGUSTA, MAINE

78-192

0 1 2 3 4 5 INCHES

B.P.R. REG. NO.	STATE	PROJECT NO.	SHEET NO.	TOTAL SHEETS
	MAINE	I-95-6 (23)	28	32

WATERVILLE INTERSTATE

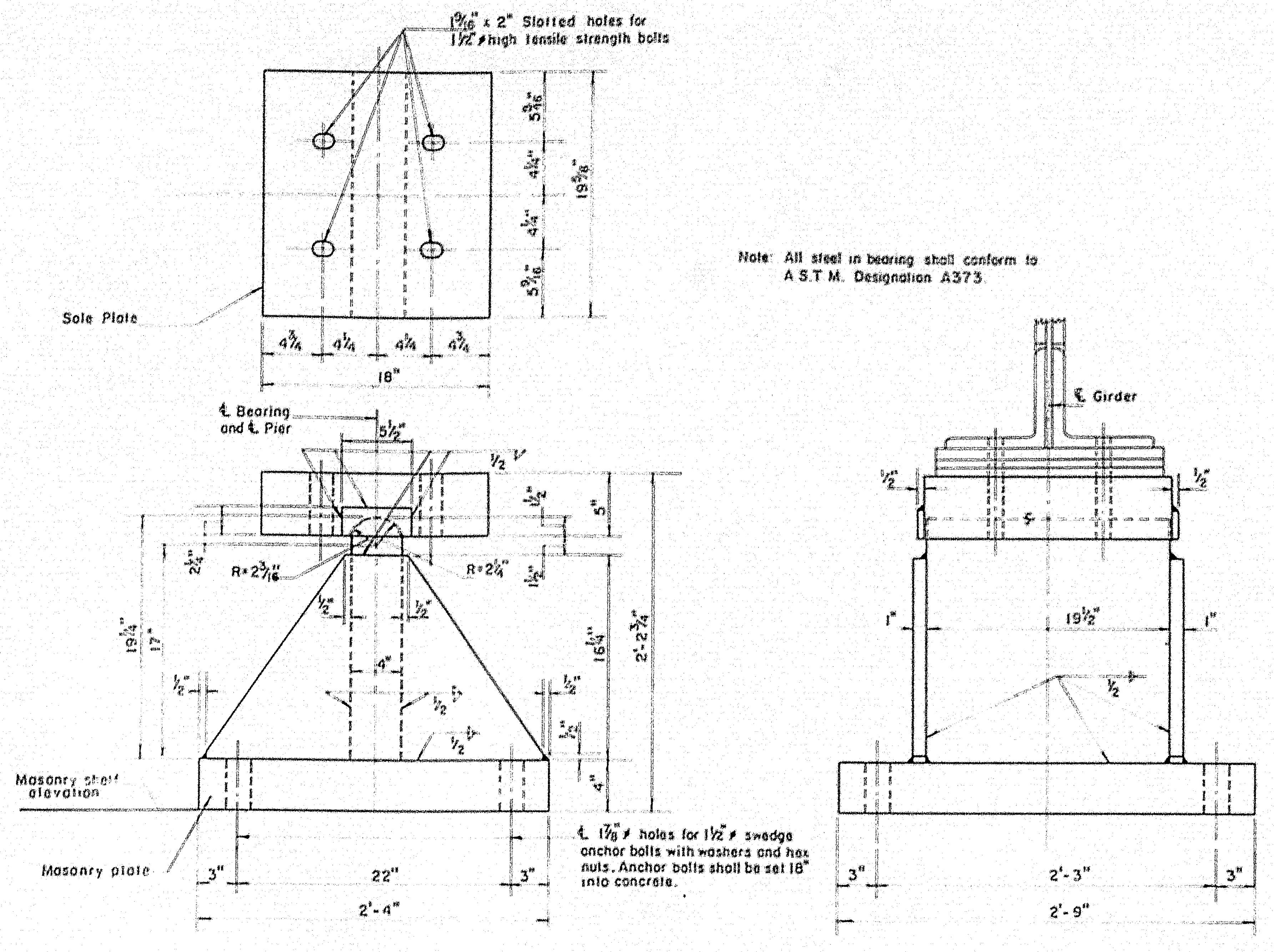
1⁹⁄₁₆" x 2" Slotted holes for 1½" ⌀ high tensile strength bolts
Sole Plate
4¾
4¼
4¼
4¾
18"
5⁹⁄₁₆"
4¼"
4¼"
5⁹⁄₁₆"
19⅛"
℄ Bearing and ℄ Pier
5½"
R=2³⁄₁₆"
R=2¼"
4"
22"
3"
2'-4"
19¼"
17"
16¼"
2'-2¾"
Masonry shelf elevation
Masonry plate
℄ 1⅞ ⌀ holes for 1½" ⌀ swedge anchor bolts with washers and hex nuts. Anchor bolts shall be set 18" into concrete.
℄ Girder
19½"
1"
2'-3"
2'-9"

Note: All steel in bearing shall conform to A.S.T.M. Designation A373.

GIRDER FIXED BEARING

Scale: 1½" = 1'-0"

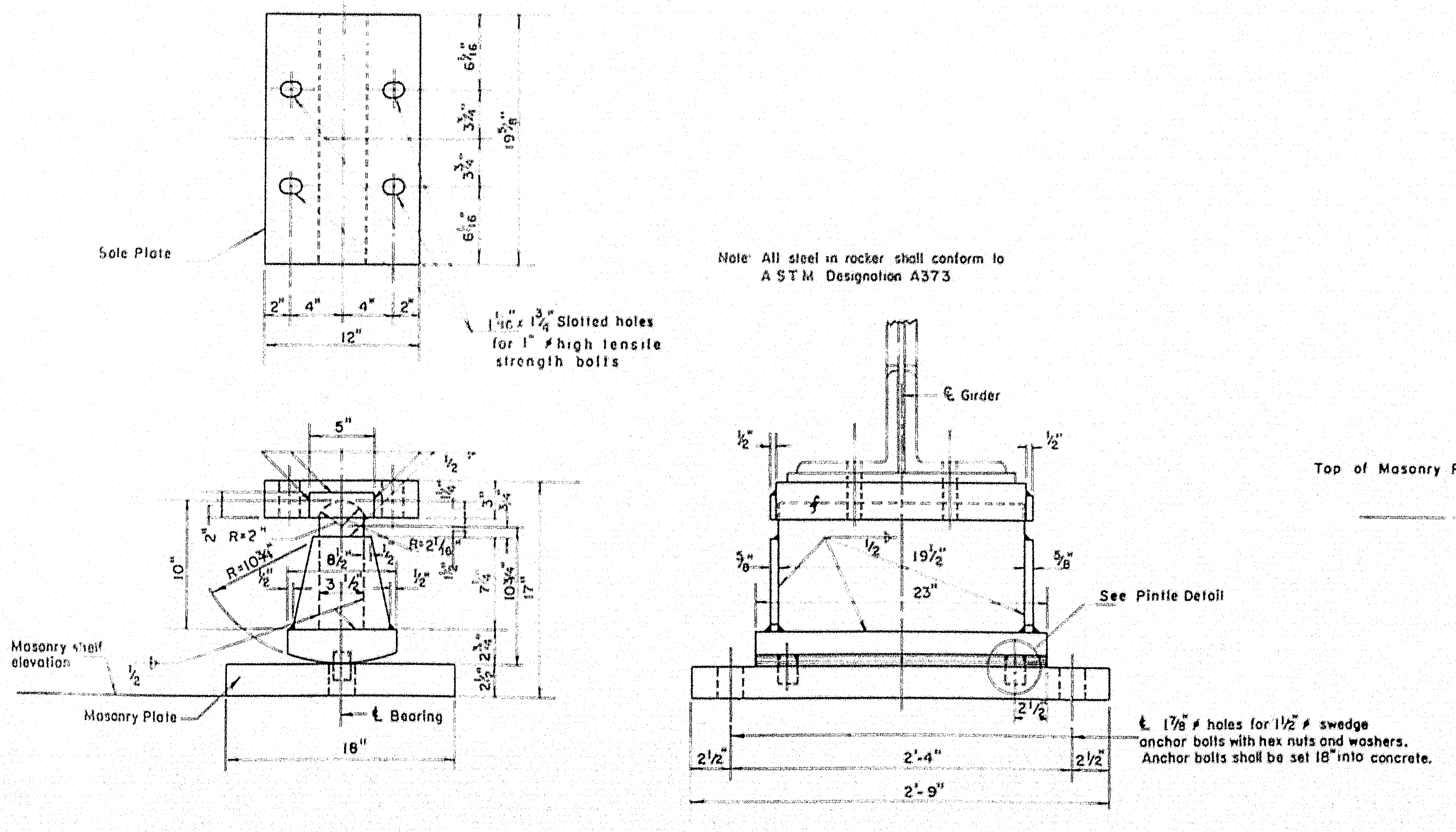
Sole Plate
2"
4"
4"
2"
12"
6⁷⁄₁₆"
3¼"
3¼"
6⁷⁄₁₆"
19⅛"
1⁵⁄₁₆" x 1¾" Slotted holes for 1" ⌀ high tensile strength bolts
5"
R=2"
R=10¾"
R=2⅛"
8½"
10"
17"
Masonry shelf elevation
Masonry Plate
℄ Bearing
18"
℄ Girder
19½"
23"
See Pintle Detail
2'-4"
2'-9"
2½"
℄ 1⅞ ⌀ holes for 1½" ⌀ swedge anchor bolts with hex nuts and washers. Anchor bolts shall be set 18" into concrete.

Note: All steel in rocker shall conform to ASTM Designation A373

GIRDER EXPANSION BEARING

Scale: 1½" = 1'-0"

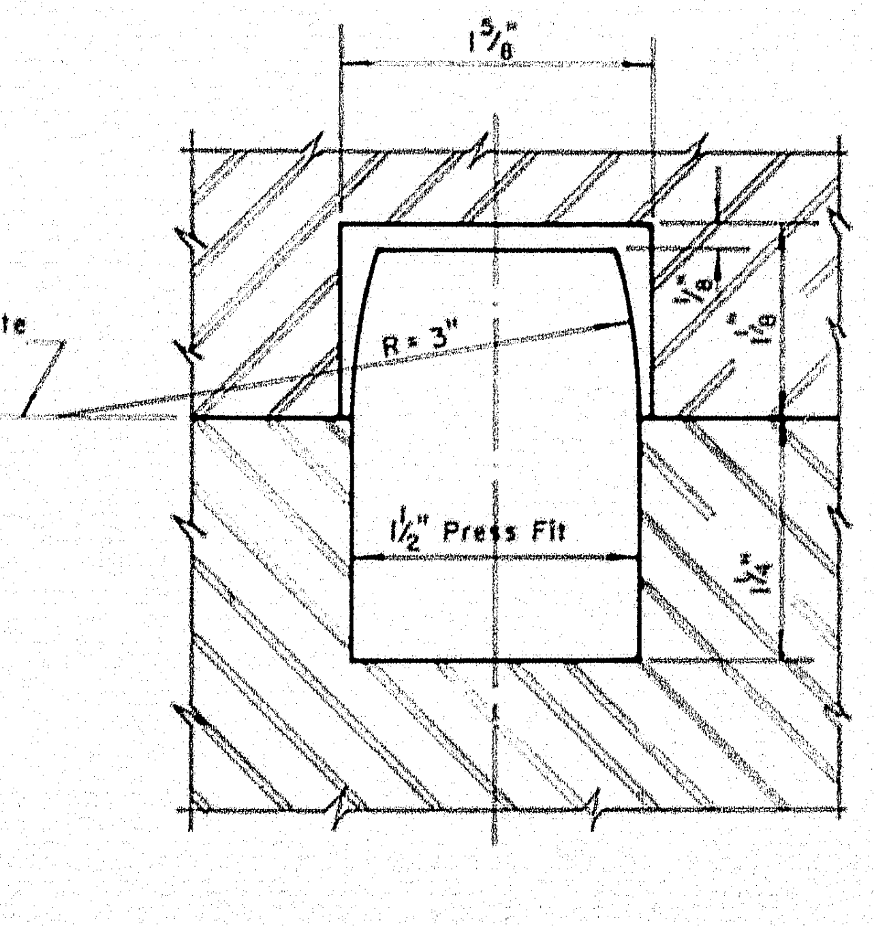
1⅝"
Top of Masonry Plate
R=3"
1½" Press Fit
1⅛"
1¼"

PINTLE DETAIL

Scale: Full Size

Fixed Bearings: Holes in Sole Pℓ., Masonry Pℓ., & Flange to be 1⅝" ⌀

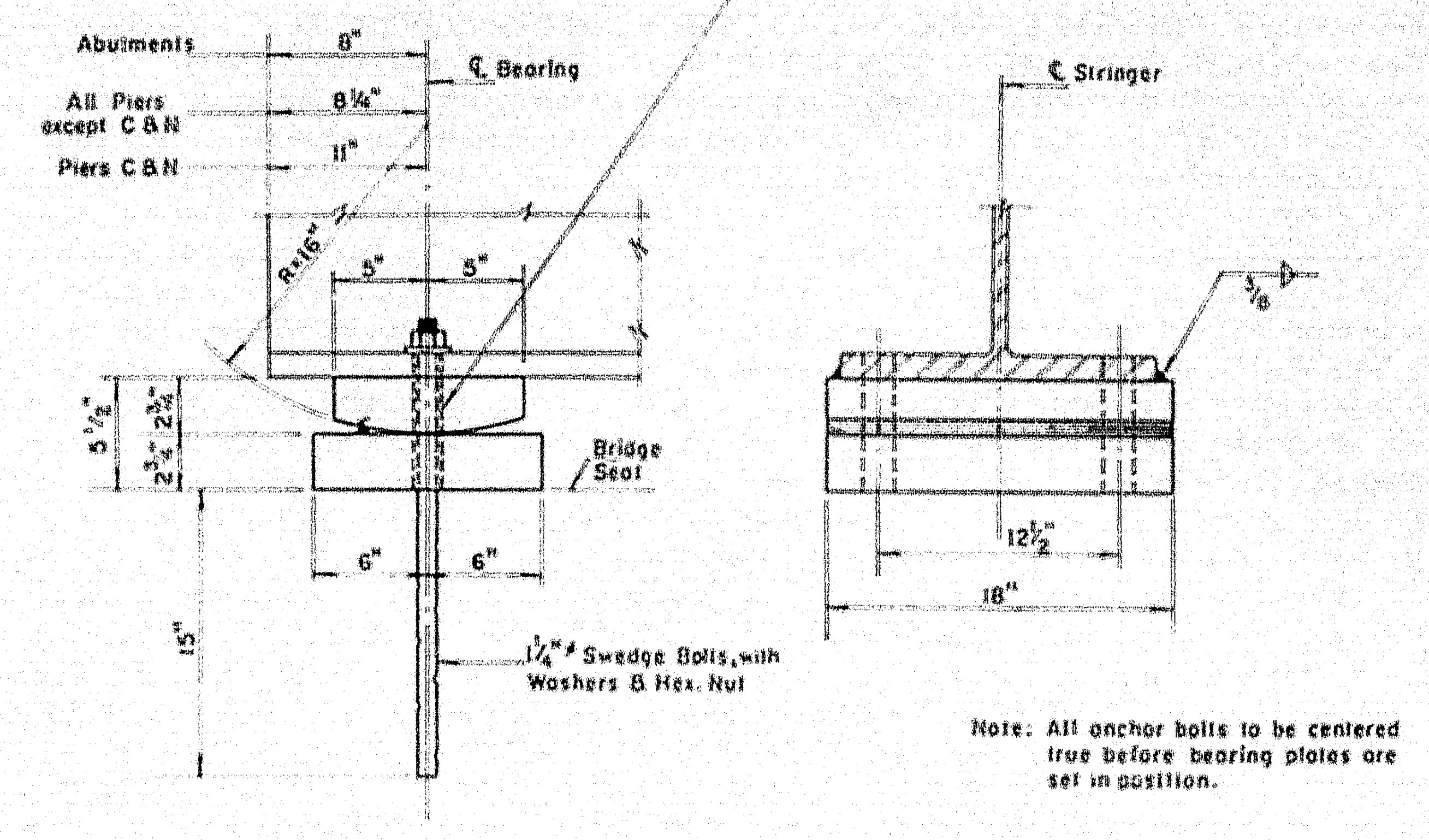
Abutments
8"
All Piers except C & N
8¼"
Piers C & N
11"
℄ Bearing
R=16"
5"
5"
5½"
2¾"
2¾"
Bridge Seat
6"
6"
15"
1¼" ⌀ Swedge Bolts, with Washers & Hex. Nut
℄ Stringer
⅜
12½"
18"

Note: All anchor bolts to be centered true before bearing plates are set in position.

STRINGER SPAN FIXED BEARING DETAIL

Scale: 1½" = 1'-0"

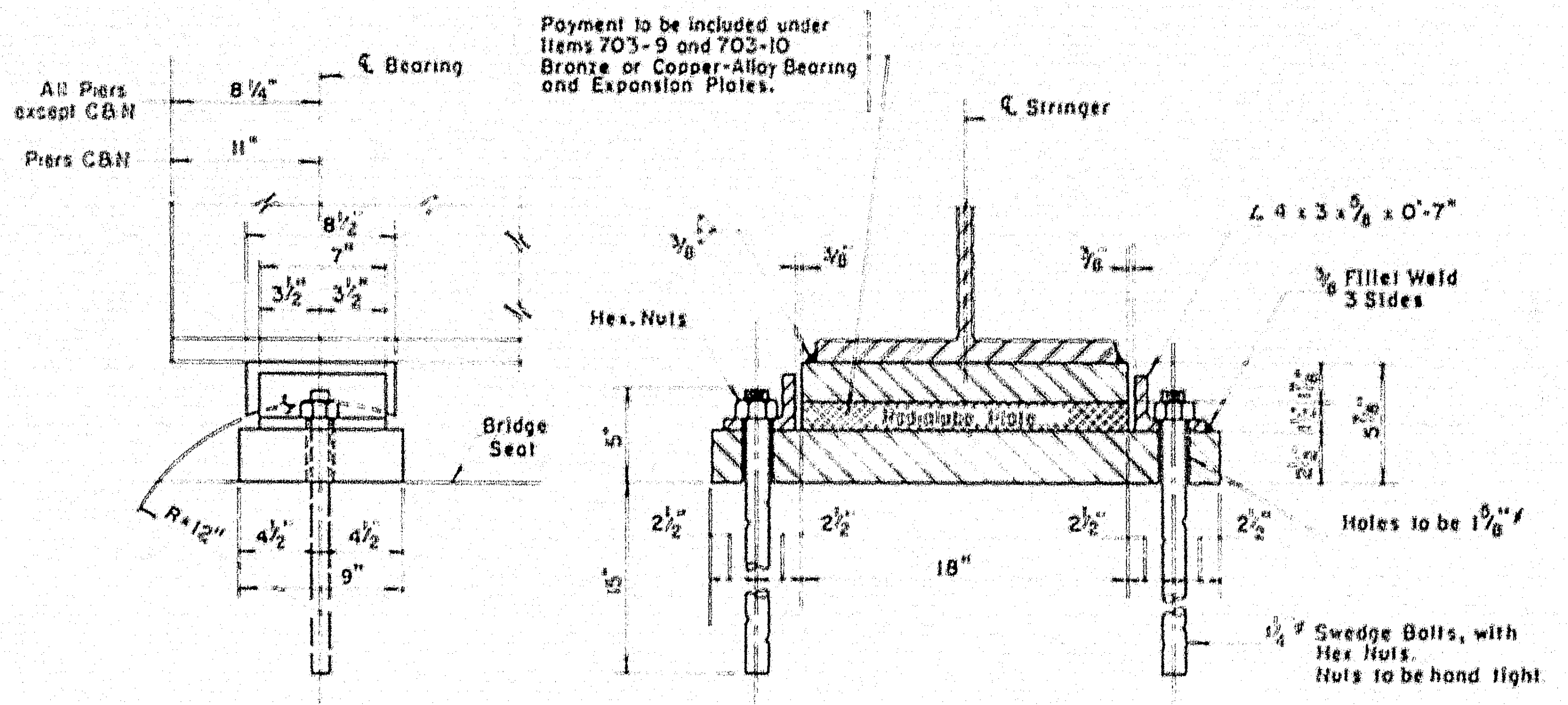
All Piers except C & N
8¼"
Piers C & N
11"
℄ Bearing
8½"
7"
3½"
3½"
Bridge Seat
R=12"
4½"
4½"
9"
Payment to be included under Items 703-9 and 703-10 Bronze or Copper-Alloy Bearing and Expansion Plates.
℄ Stringer
∠ 4 x 3 x ⅝ x 0'-7"
⅜ Fillet Weld 3 Sides
Hex. Nuts
5"
15"
2½"
18"
Holes to be 1⅝" ⌀
1¼" ⌀ Swedge Bolts, with Hex Nuts. Nuts to be hand tight

STRINGER SPAN EXPANSION BEARING DETAIL

Scale: 1½" = 1'-0"

THE CLARKESON ENG[illegible] CO., INC.

DESIGN R.F.	CHECK J.I.M.	BRIDGE NO
		SURVEY
DRAWN D.E.S.	APPROVED W.A.H.-C.J.M.	PLOT

STATE HIGHWAY COMMISSION

INTERSTATE #95
OVER
MESSALONSKEE STREAM & QUARRY ROAD (RELOC.)
IN THE CITY OF
WATERVILLE
KENNEBEC COUNTY

BEARING DETAILS

SHEET 21 OF 23 SHEETS AUGUSTA, MAINE

78-193

B.P.R. DIV. NO.	STATE	PROJECT NO	SHEET NO.	TOTAL SHEETS
1	MAINE	I-95-6(23)	29	32

WATERVILLE INTERSTATE

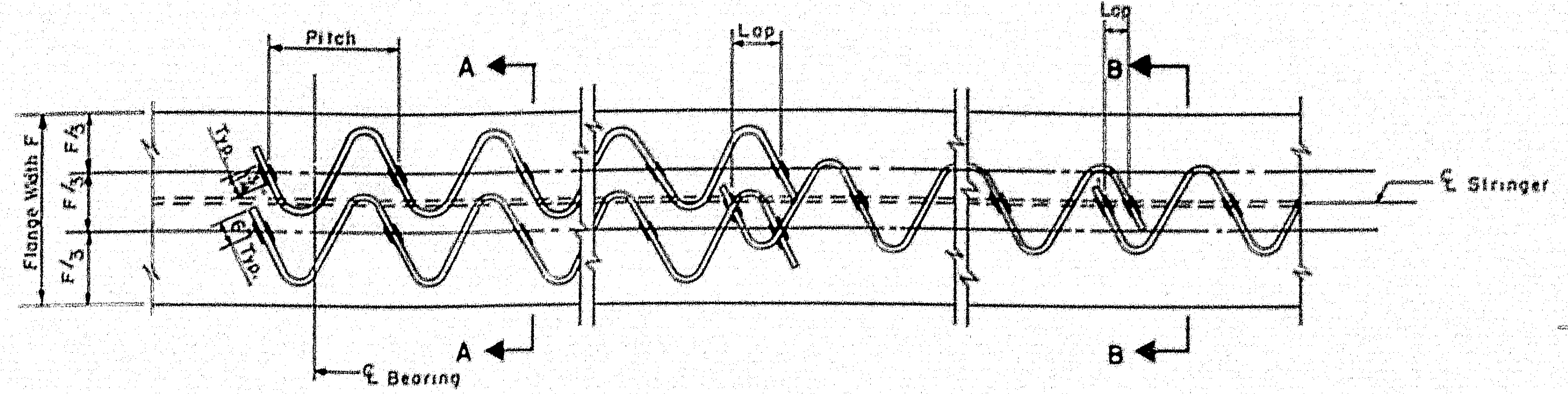

Pitch
Lap
Lap
A
A
B
B
Flange Width F
F/3
F/3
F/3
Typ.
℄ Stringer
℄ Bearing

PLAN

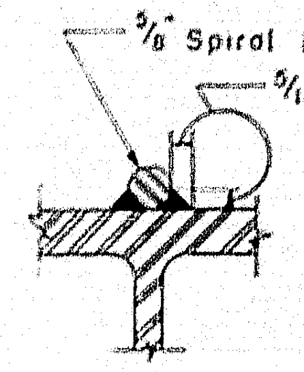

5/8" Spiral Bar
5/16" Field Weld

DETAIL A

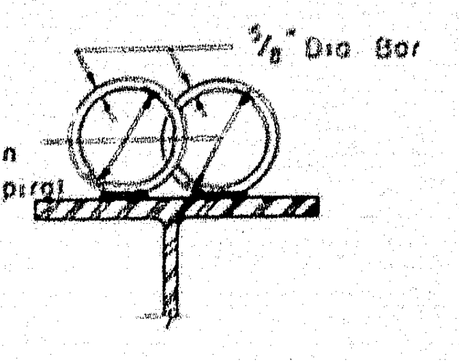

5/8" Dia Bar
4½" Mean Dia. of Spiral

SECTION A-A

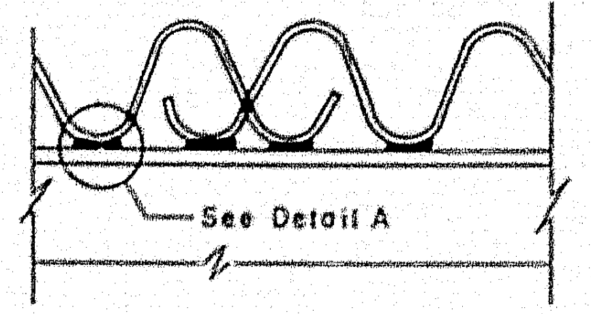

See Detail A

ELEVATION

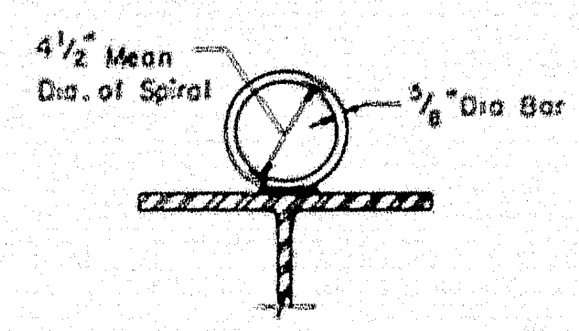

4½" Mean Dia. of Spiral
5/8" Dia Bar

SECTION B-B

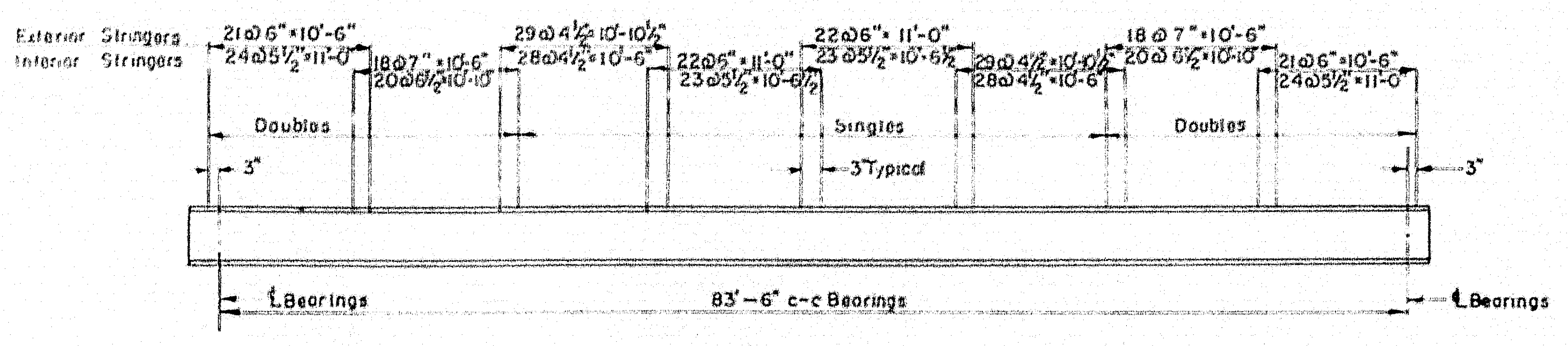

Exterior Stringers
Interior Stringers
21@6"=10'-6"
24@5½"=11'-0"
18@7"=10'-6"
20@6½"=10'-10"
29@4½"=10'-10½"
28@4½"=10'-6"
22@6"=11'-0"
23@5½"=10'-6½"
22@6"=11'-0"
23@5½"=10'-6½"
29@4½"=10'-10½"
28@4½"=10'-6"
18@7"=10'-6"
20@6½"=10'-10"
21@6"=10'-6"
24@5½"=11'-0"
Doubles
Singles
Doubles
3"
3" Typical
3"
℄ Bearings
83'-6" c-c Bearings
℄ Bearings

TYPICAL SPIRAL SHEAR CONNECTORS

(DETAILS & LAYOUT)

NOT TO SCALE

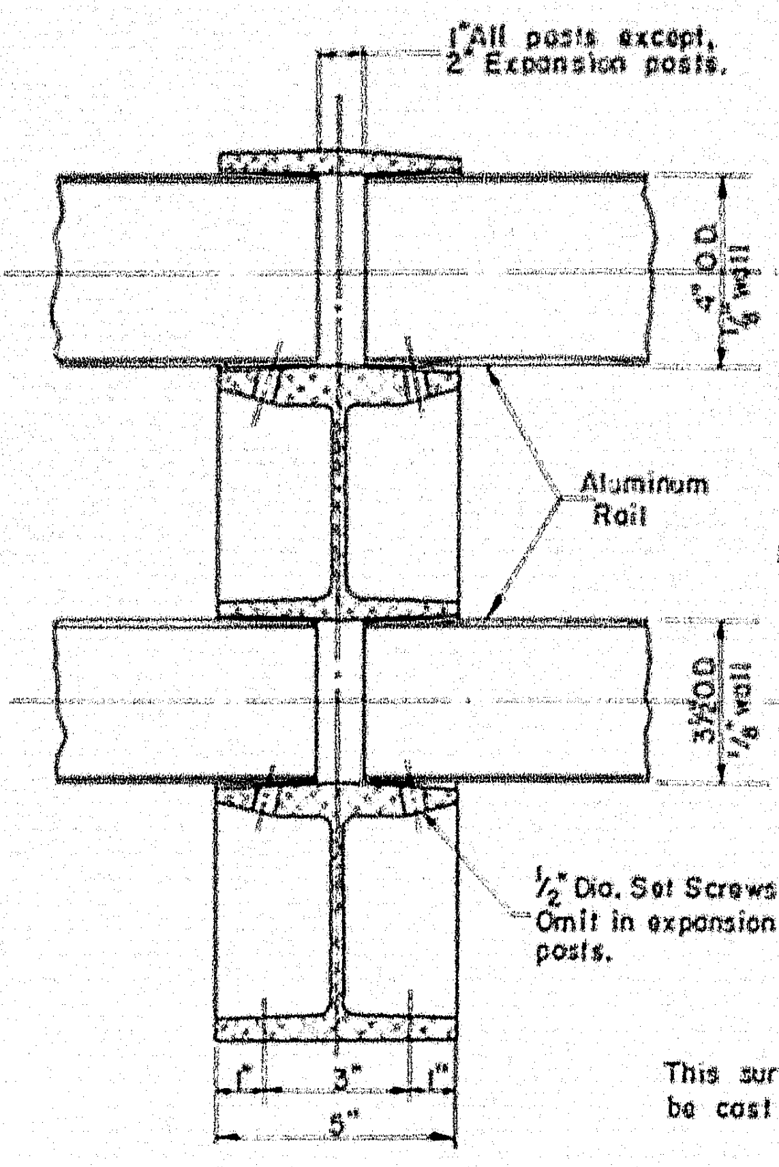

1" All posts except, 2" Expansion posts.
4" O.D. ⅛" wall
Aluminum Rail
3½" O.D. ⅛" wall
½" Dia. Set Screws Omit in expansion posts.
3"
5"

SECTION E-E

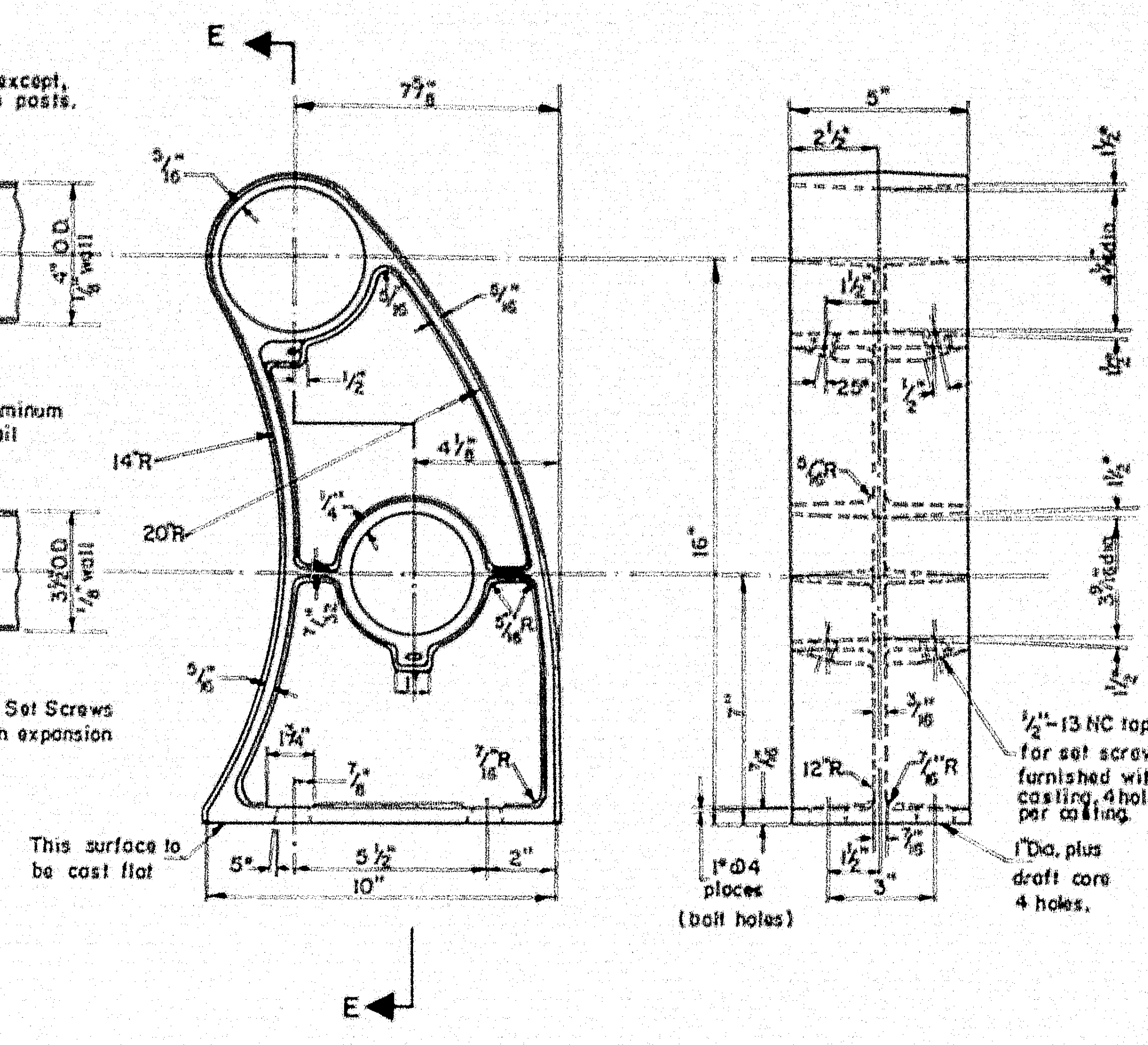

E
7⅞"
5/16"
5/16"
5/16"
½"
14"R
20"R
4⅛"
16"
1¾"
7/16"
7/8"R
This surface to be cast flat
5"
5½"
2"
10"
E
5"
2½"
1½"
1¼"
12"R
7/8"R
1" Φ 4 places (bolt holes)
3"
½"-13 NC tap thru for set screws furnished with casting. 4 holes per casting.
1" Dia. plus draft core 4 holes.

ALUMINUM RAIL DETAIL

Scale: 3" = 1'-0"

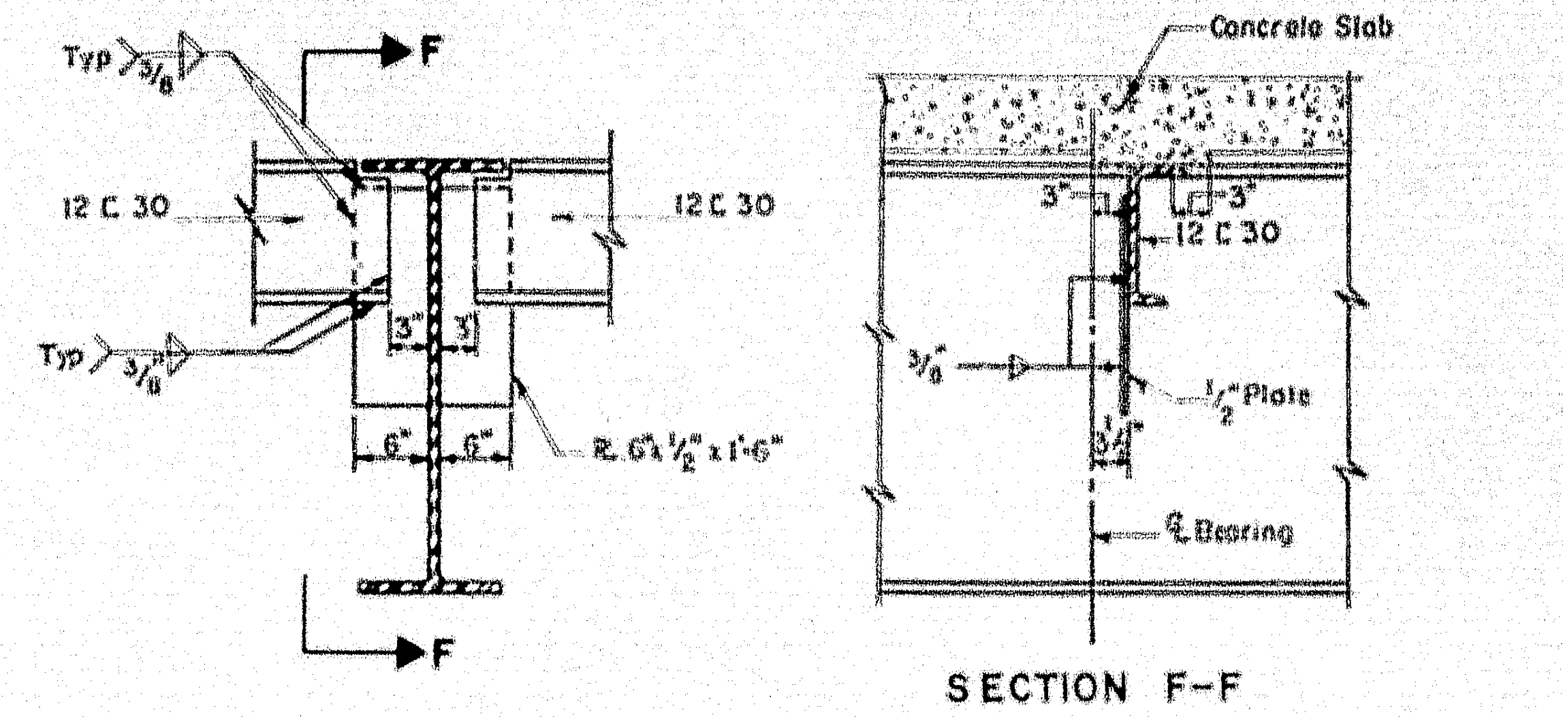

Typ 3/8
F
12 C 30
12 C 30
Typ 3/8
3"
3"
6"
6"
R 6"x½"x1'-6"
F
Concrete Slab
3"
3"
12 C 30
3/8
½" Plate
℄ Bearing

SECTION F-F

WELDED END DIAPHRAGM CONNECTION

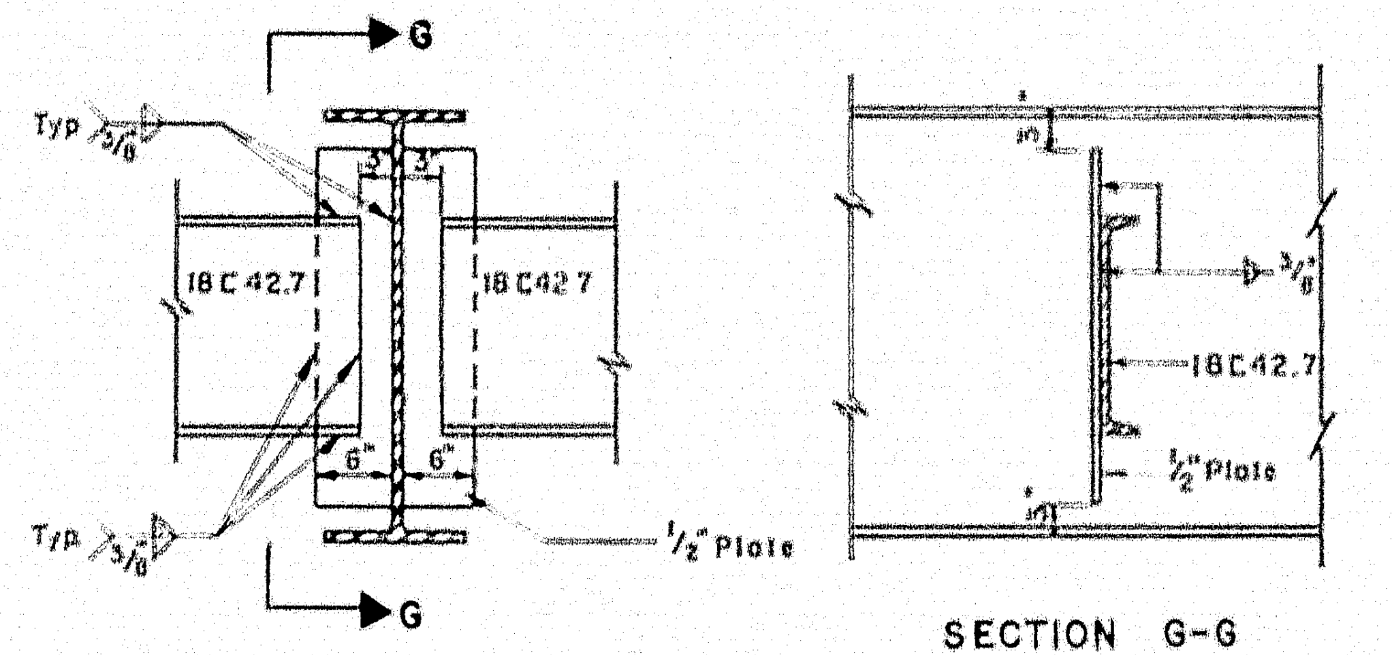

G
Typ 3/8
18 C 42.7
18 C 42.7
6"
6"
Typ 3/8
½" Plate
G
3/8
18 C 42.7
½" Plate

SECTION G-G

WELDED DIAPHRAGM CONNECTION

SCALE: ¾" = 1'-0"

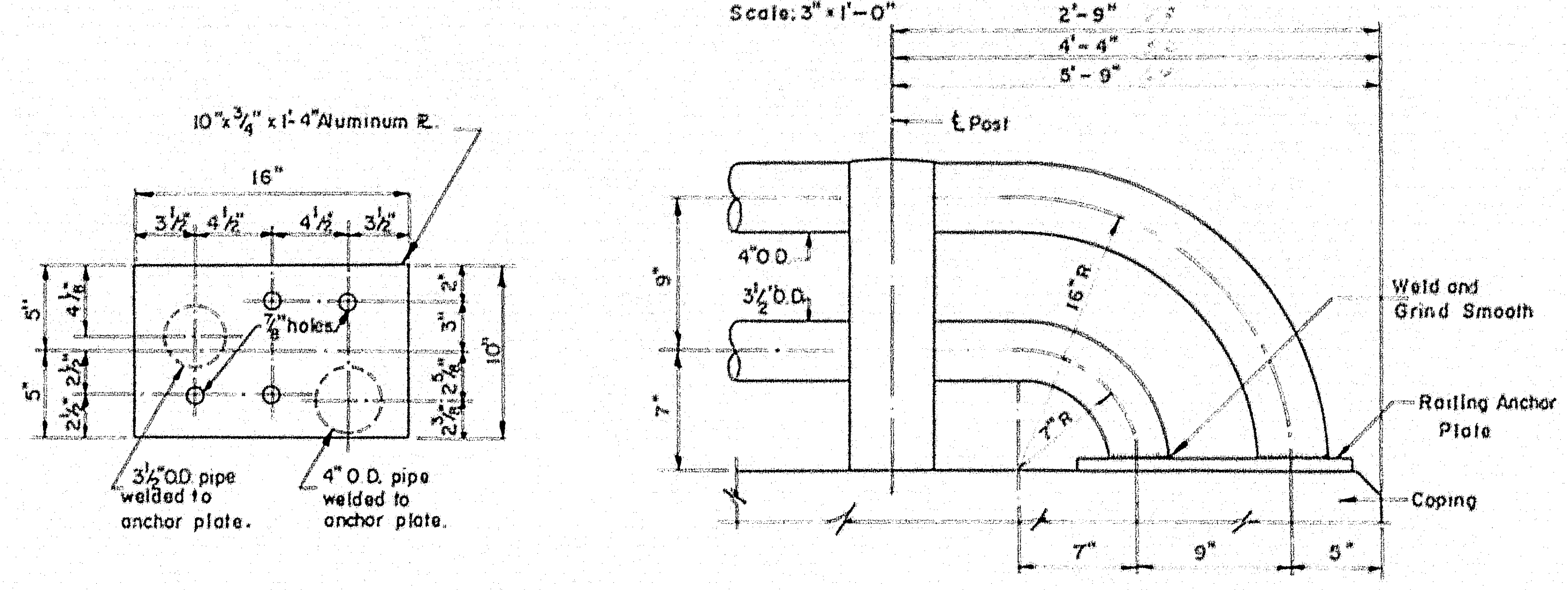

10"x¾"x1'-4" Aluminum R
16"
3½"
4½"
4½"
3½"
5"
5"
2"
3"
10"
7/8" holes
3½" O.D. pipe welded to anchor plate.
4" O.D. pipe welded to anchor plate.
2'-9"
4'-4"
5'-9"
℄ Post
4" O.D.
3½" O.D.
9"
7"
16"R
7"R
Weld and Grind Smooth
Railing Anchor Plate
Coping
7"
9"
5"

END RAILING DETAIL

Scale: ½" = 1'-0"

Notes: 1. Any variation in railing dimensions shall be submitted for approval.
2. All anchor bolts, nuts and washers to be aluminum alloy.
3. All anchor bolts to be ¾" φ bolts set 11" into concrete.

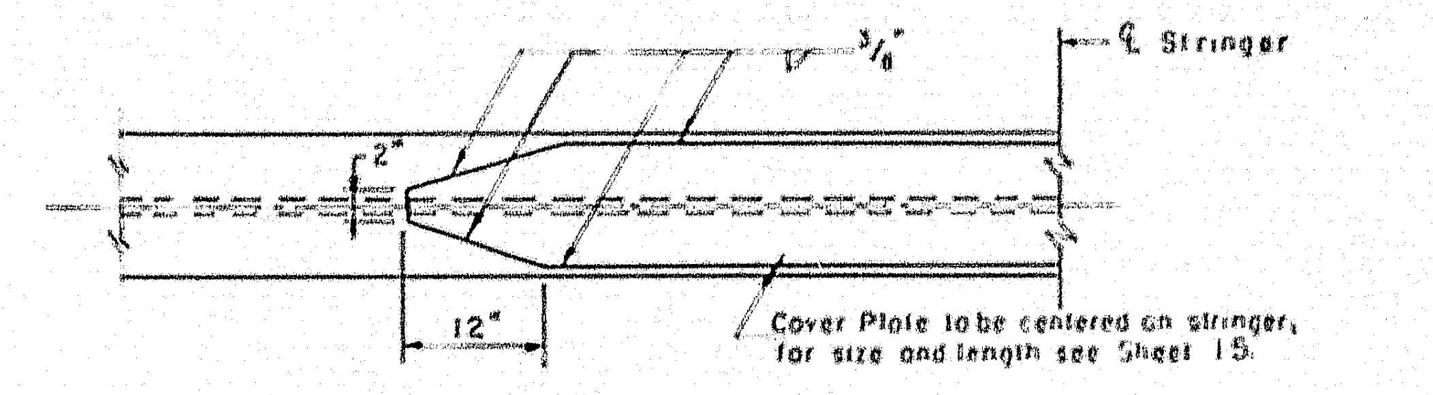

3/8
℄ Stringer
2"
12"
Cover Plate to be centered on stringer, for size and length see Sheet 15.

COVER PLATE DETAIL

NOT TO SCALE

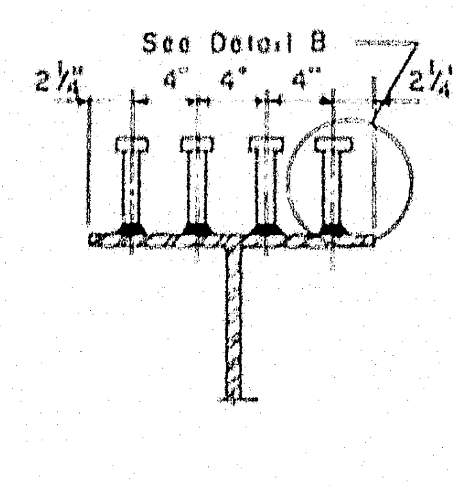

See Detail B
2¼"
4"
4"
4"
2¼"

SECTION C-C

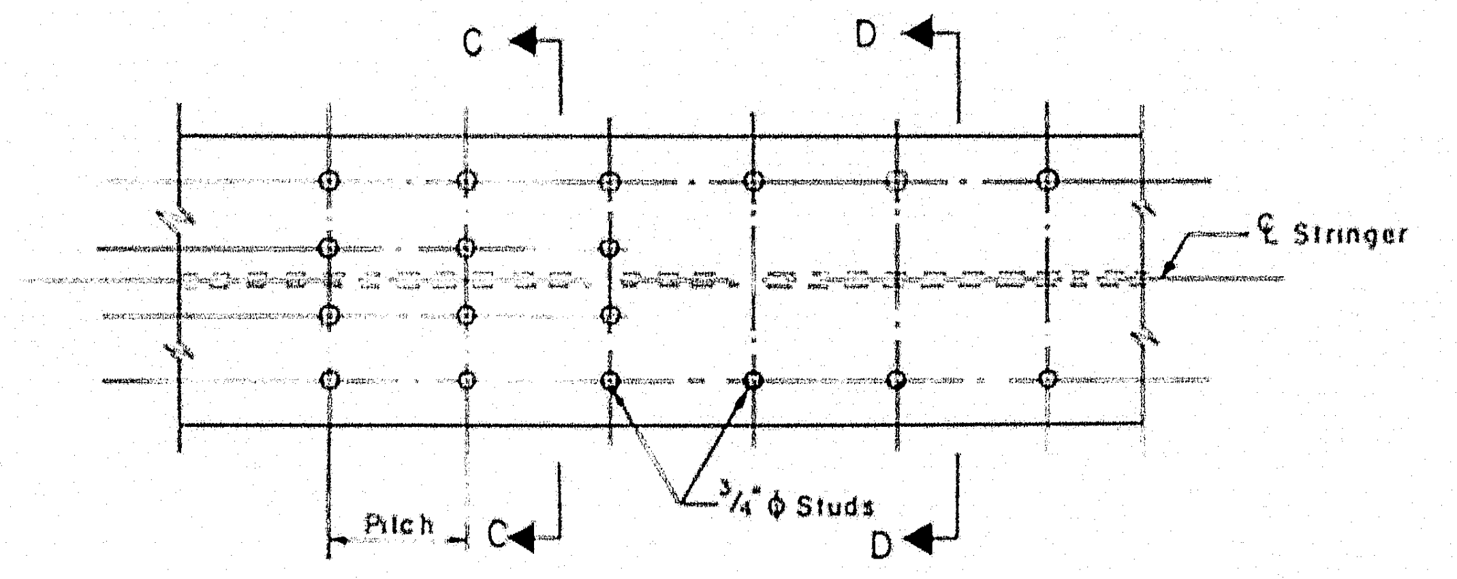

C
D
℄ Stringer
Pitch
C
¾" φ Studs
D

PLAN

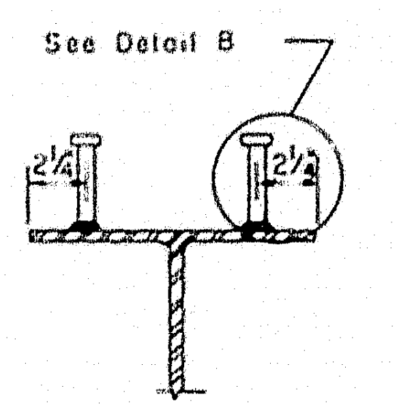

See Detail B
2¼"
2½"

SECTION D-D

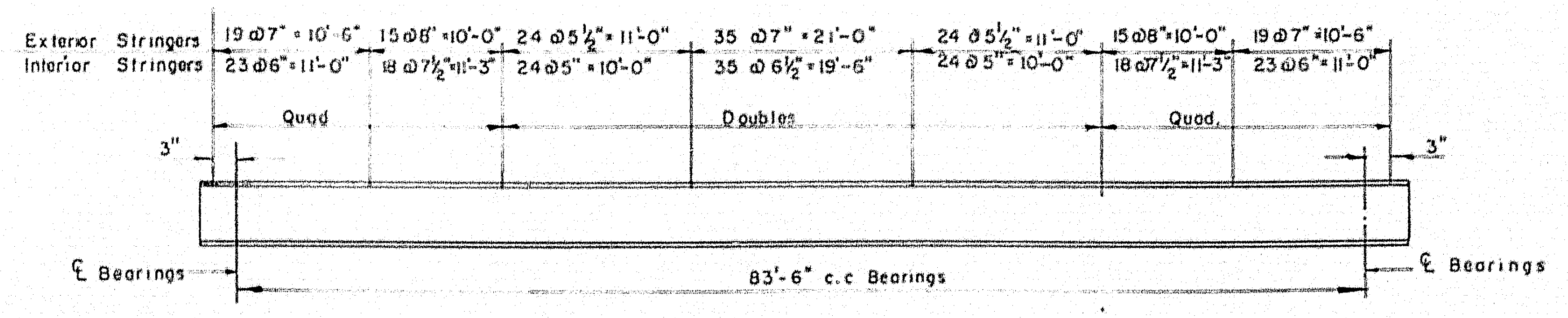

Exterior Stringers
Interior Stringers
19@7"=10'-6"
23@6"=11'-0"
15@8"=10'-0"
18@7½"=11'-3"
24@5½"=11'-0"
24@5"=10'-0"
35@7"=21'-0"
35@6½"=19'-6"
24@5½"=11'-0"
24@5"=10'-0"
15@8"=10'-0"
18@7½"=11'-3"
19@7"=10'-6"
23@6"=11'-0"
Quad
Doubles
Quad
3"
3"
℄ Bearings
83'-6" c.c Bearings
℄ Bearings

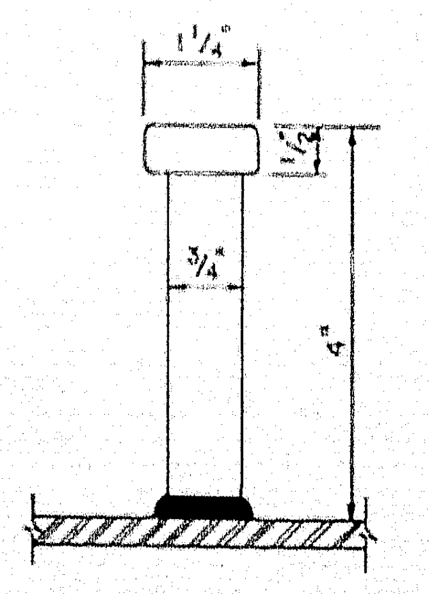

DETAIL B

TYPICAL STUD SHEAR CONNECTORS

(DETAILS & LAYOUT)

NOT TO SCALE

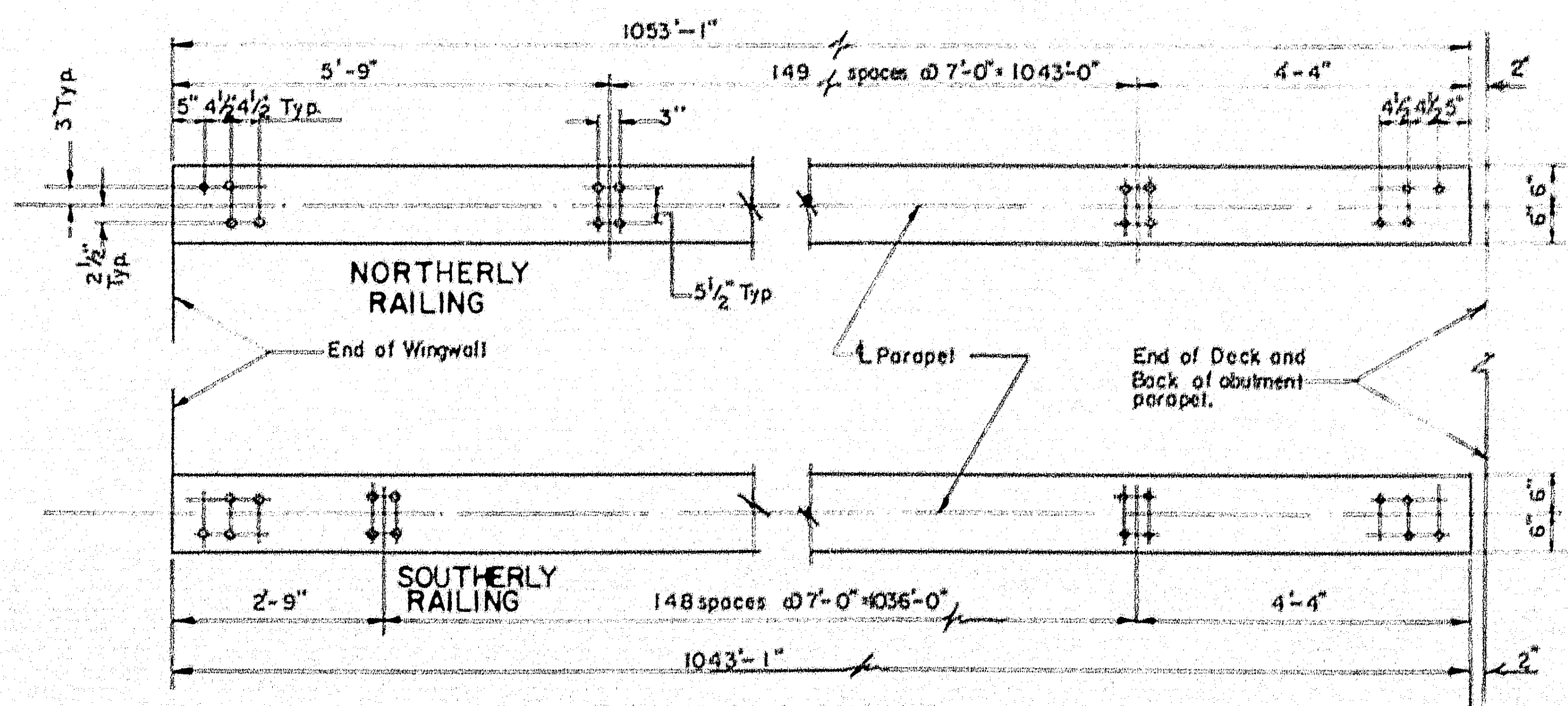

1053'-1"
5'-9"
149 spaces @7'-0"=1043'-0"
4'-4"
2'
3 Typ
5"
4½
4½
Typ.
3"
4½
4½
5"
1½"
Typ
6"
6"
12"
NORTHERLY RAILING
5½" Typ
End of Wingwall
℄ Parapet
End of Deck and Back of abutment parapet.
6"
6"
12"
2'-9"
SOUTHERLY RAILING
148 spaces @7'-0"=1036'-0"
4'-4"
1043'-1"
2"

RAILING LAYOUT

Scale: ½" = 1'-0"

THE CLARKESON ENGINEERING CO., INC.

DESIGN G.B.	CHECK J.T. & H.P.	BRIDGE NO.
DRAWN R.J.F.	APPROVED W.A.H.-C.J.M.	SURVEY PLOT

STATE HIGHWAY COMMISSION
INTERSTATE #95
OVER
MESSALONSKEE STREAM
& QUARRY ROAD (RELOC.)
IN THE CITY OF
WATERVILLE
KENNEBEC COUNTY
SUPERSTRUCTURE DETAILS

SHEET 22 OF 23 SHEETS AUGUSTA MAINE

78-194

0
1
2
3
4
5
INCHES

F.P.H. REG. NO.	STATE	PROJECT NO.	SHEET NO.	TOTAL SHEETS
1	MAINE	I-95-6 (23)	30	32

WATERVILLE INTERSTATE

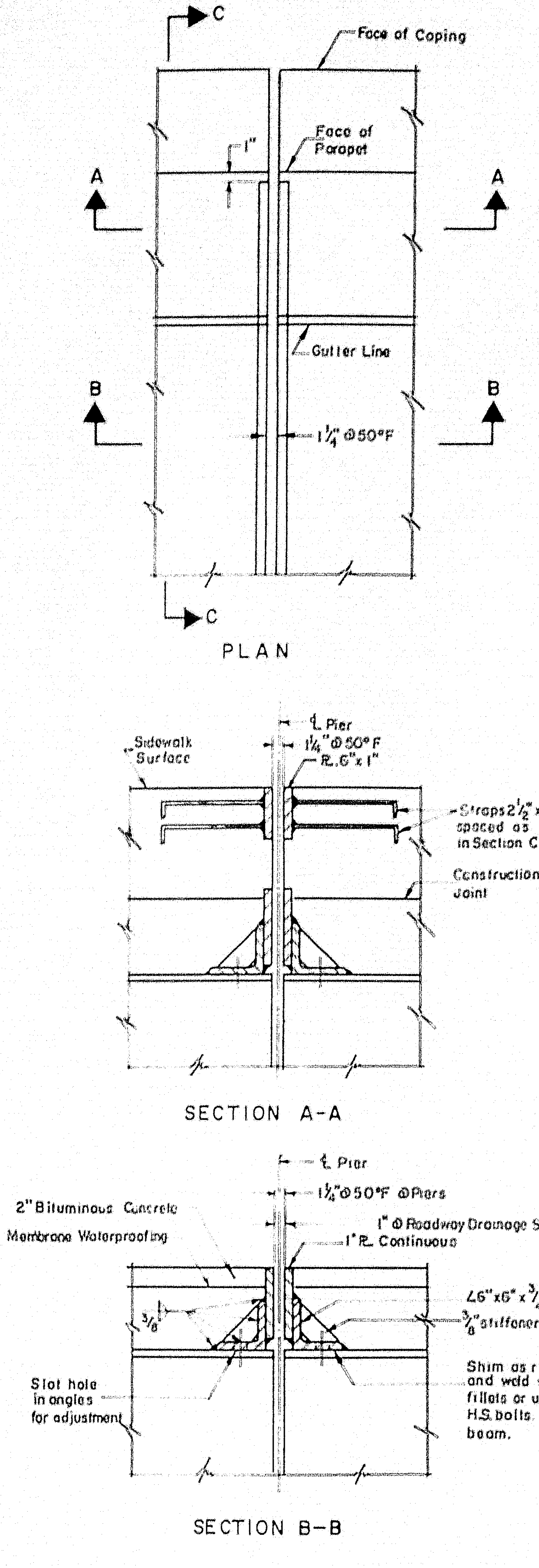
C
Face of Coping
Face of Parapet
1"
A
A
Gutter Line
B
B
1¼"Ø50°F
C
PLAN
℄ Pier
1¼"Ø50°F
R. 6"x1"
Sidewalk Surface
Straps 2½"x½" spaced as shown in Section C-C
Construction Joint
SECTION A-A
℄ Pier
1¼"Ø50°F @Piers
2" Bituminous Concrete
Membrane Waterproofing
1"Ø Roadway Drainage Slot
1"R. Continuous
∠6"x6"x¾"Cont
⅜" stiffeners @2'-0"
Slot hole in angles for adjustment
Shim as required and weld with ⅜ fillets or use ⅞"Ø H.S. bolts 2 per beam.
SECTION B-B

ROADWAY JOINT AT PIERS

Scale 1" = 1'-0"

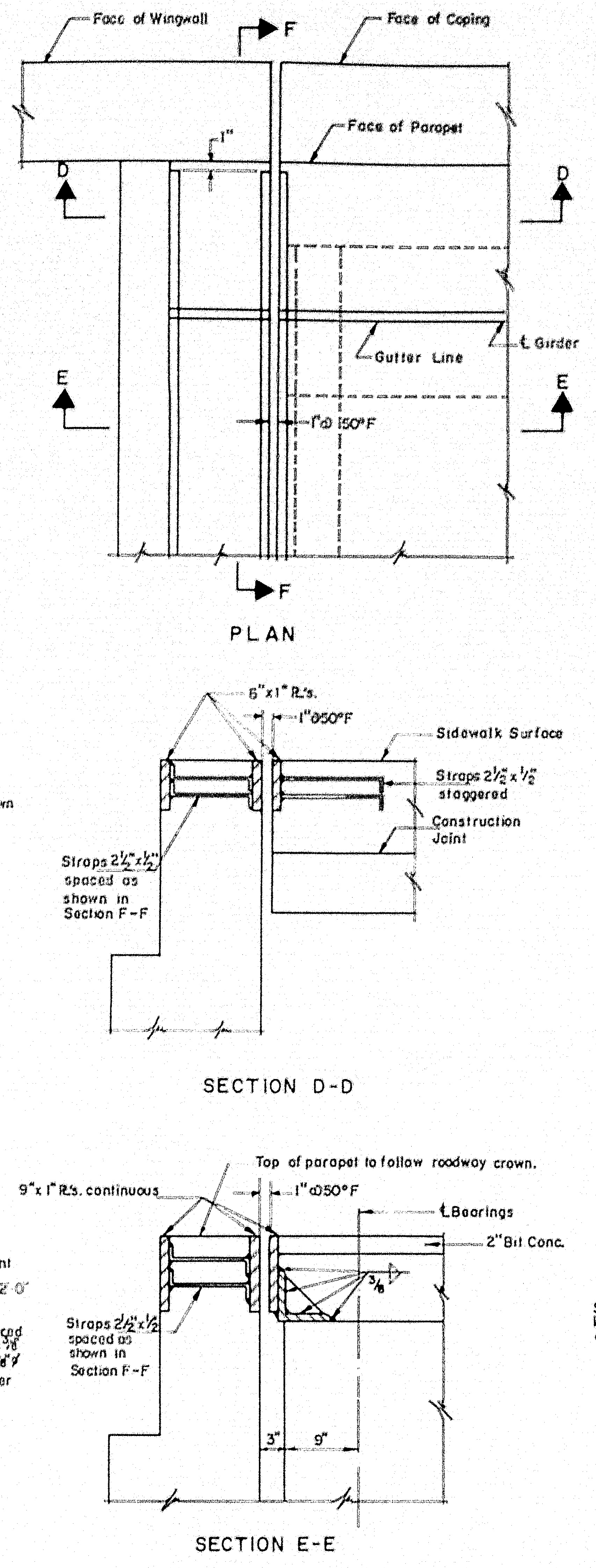
Face of Wingwall
F
Face of Coping
1"
Face of Parapet
D
D
℄ Girder
Gutter Line
E
E
1"Ø 50°F
F
PLAN
6"x1" R.'s.
1"Ø50°F
Sidewalk Surface
Straps 2½"x½" staggered
Construction Joint
Straps 2½"x½" spaced as shown in Section F-F
SECTION D-D
Top of parapet to follow roadway crown.
9"x1" R.'s. continuous
1"Ø50°F
℄ Bearings
2" Bit Conc.
Straps 2½"x½" spaced as shown in Section F-F
3"
9"
SECTION E-E

ROADWAY JOINT AT WESTERLY ABUTMENT

Scale 1" = 1'-0"

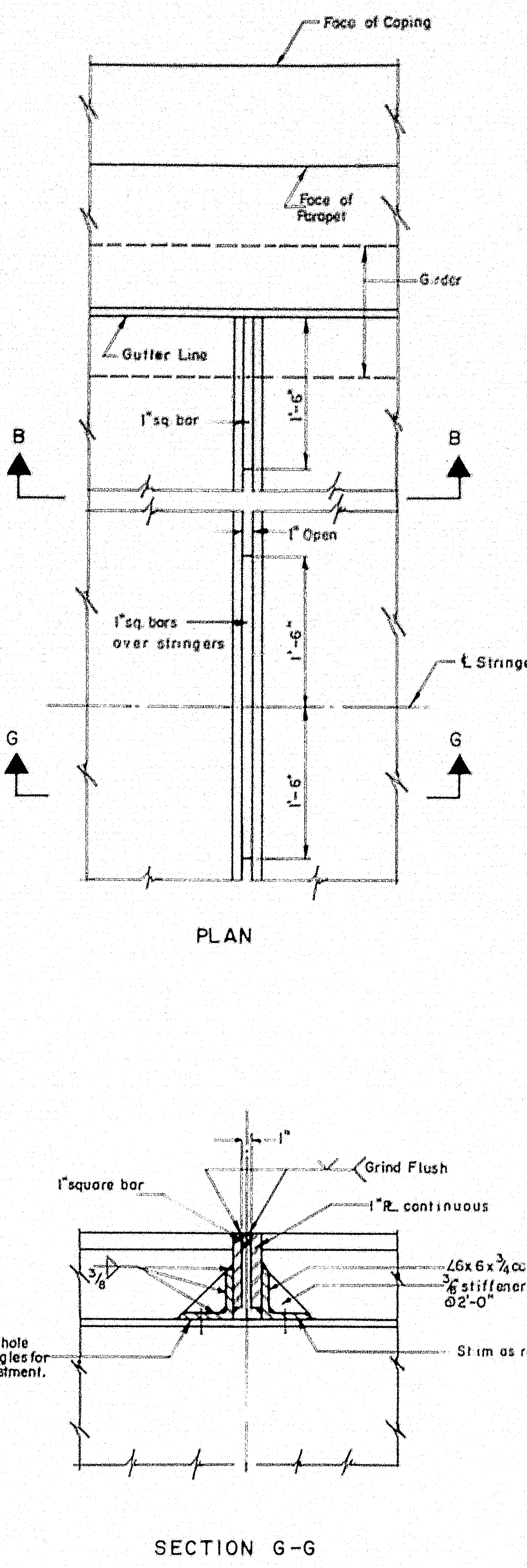
Face of Coping
Face of Parapet
Girder
Gutter Line
1"sq. bar
1'-6"
B
B
1" Open
1"sq. bars over stringers
1'-6"
℄ Stringer
G
G
1'-6"
PLAN
1"
1"square bar
Grind Flush
1"R. continuous
∠6x6x¾ cont.
⅜" stiffeners @2'-0"
Slot hole in angles for adjustment.
Shim as required
SECTION G-G

ROADWAY DRAINAGE SLOT

Scale 1" = 1'-0"

Note: At drainage slots only 6x6x¾ angles are to be fastened to stringers and girders with ⅞"Ø H.S bolts.

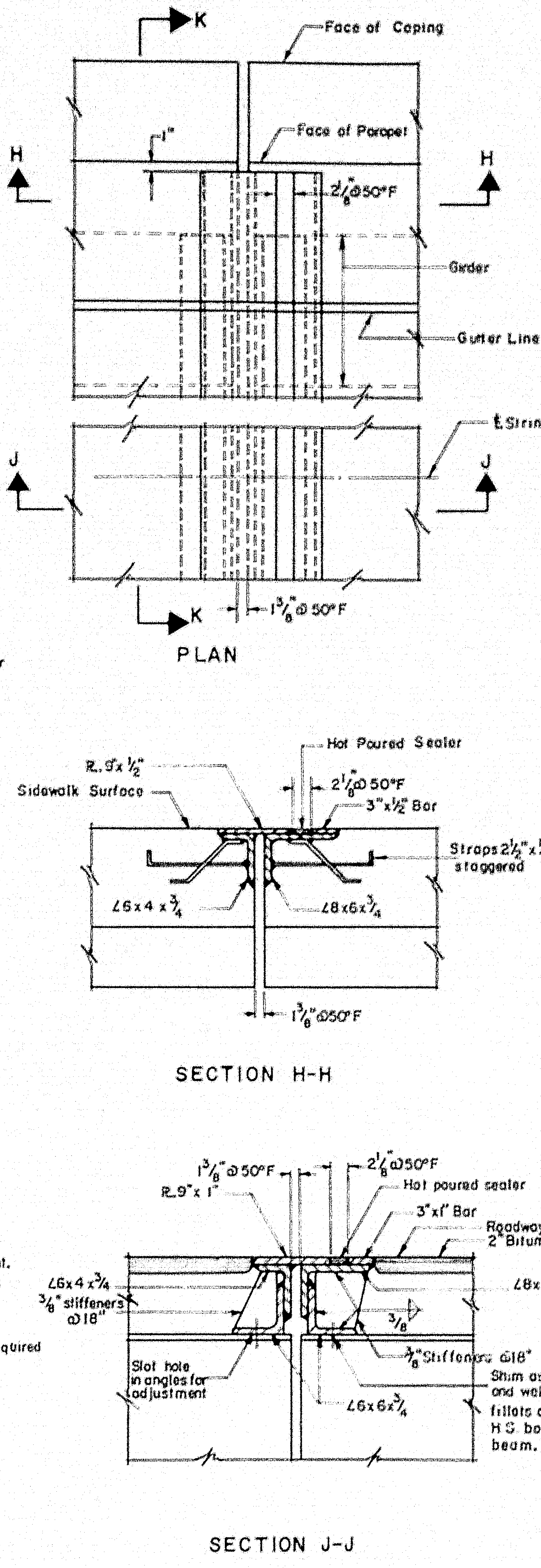
K
Face of Coping
1"
Face of Parapet
H
H
2⅛"Ø50°F
Girder
Gutter Line
℄ Stringer
J
J
K
1⅜"Ø50°F
PLAN
Hot Poured Sealer
R. 9"x½"
Sidewalk Surface
2⅛"Ø 50°F
3"x½" Bar
Straps 2½"x½" staggered
∠6x4x¾
∠8x6x¾
1⅜"Ø50°F
SECTION H-H
1⅜"Ø50°F
2⅛"Ø50°F
R. 9"x1"
Hot poured sealer
3"x1" Bar
Roadway Surface
2" Bituminous Conc.
∠6x4x¾
⅜" stiffeners @18"
∠8x6x¾
⅜" Stiffeners @18"
Slot hole in angles for adjustment
Shim as required and weld with ⅜" fillets or use ⅞"Ø H.S. bolts 2 per beam.
∠6x6x¾
SECTION J-J

ROADWAY JOINT AT HINGE

Scale 1" = 1'-0"

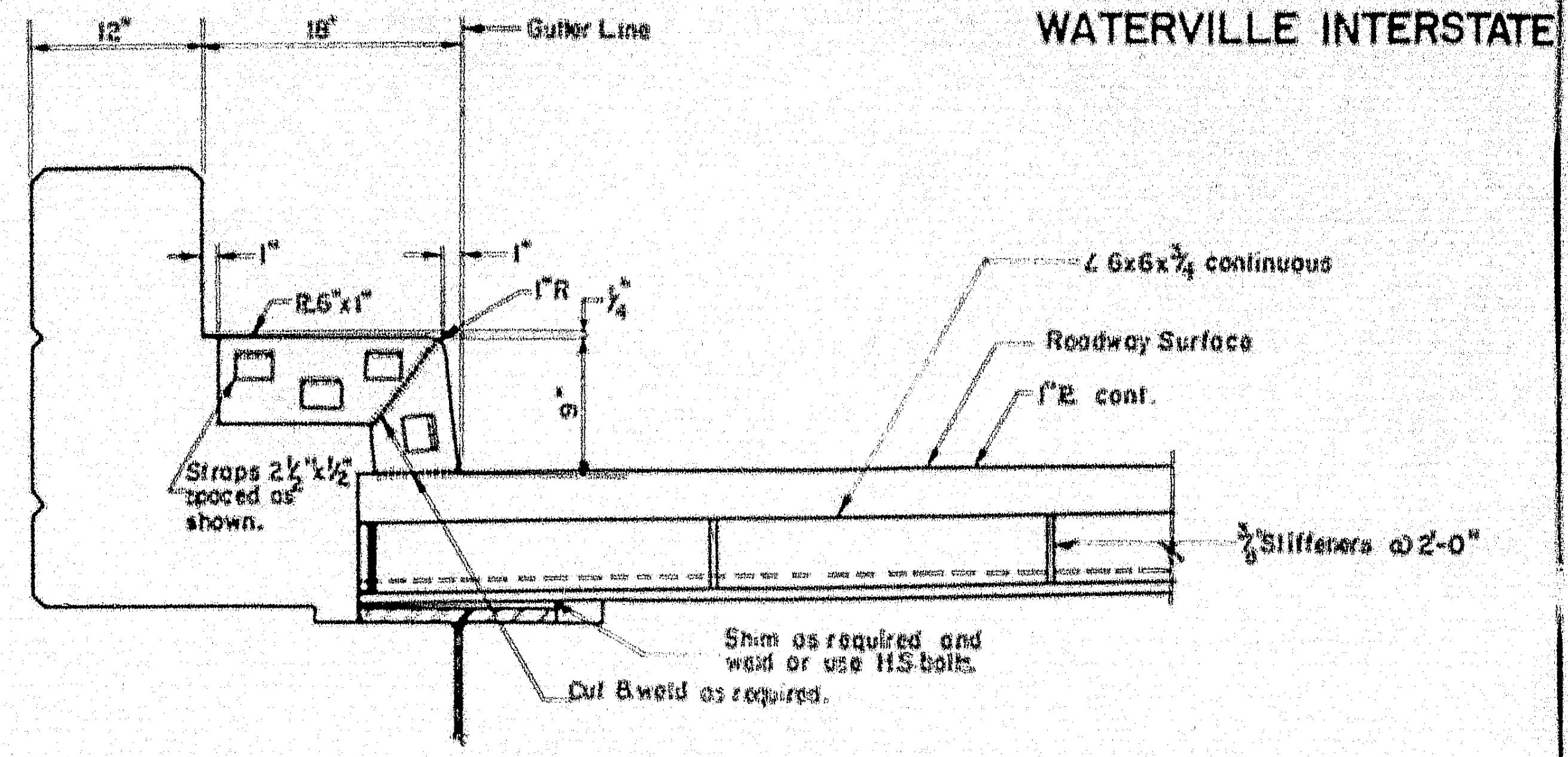
12"
18"
Gutter Line
1"
1"
1"R
¼"
R. 6"x1"
∠ 6x6x¾ continuous
Roadway Surface
1"R. cont.
9"
Straps 2½"x½" spaced as shown.
⅜" Stiffeners @2'-0"
Shim as required and weld or use H.S. bolts.
Cut B. weld as required.

SECTION C-C
Scale 1" = 1'-0"

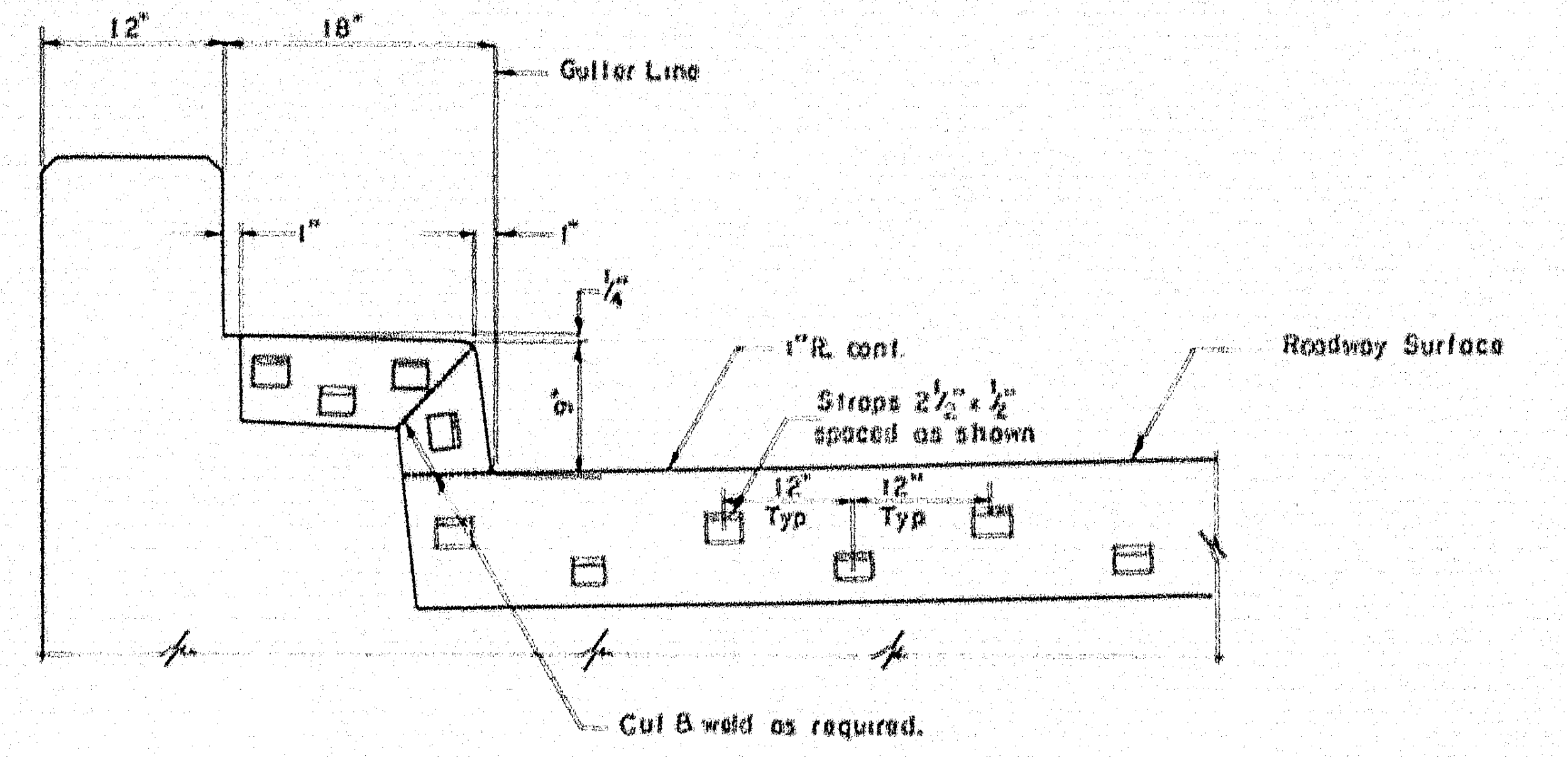
12"
18"
Gutter Line
1"
1"
¼"
9"
1"R. cont.
Straps 2½"x½" spaced as shown
Roadway Surface
12" Typ
12" Typ
Cut B. weld as required.

SECTION F-F
Scale 1" = 1'-0"

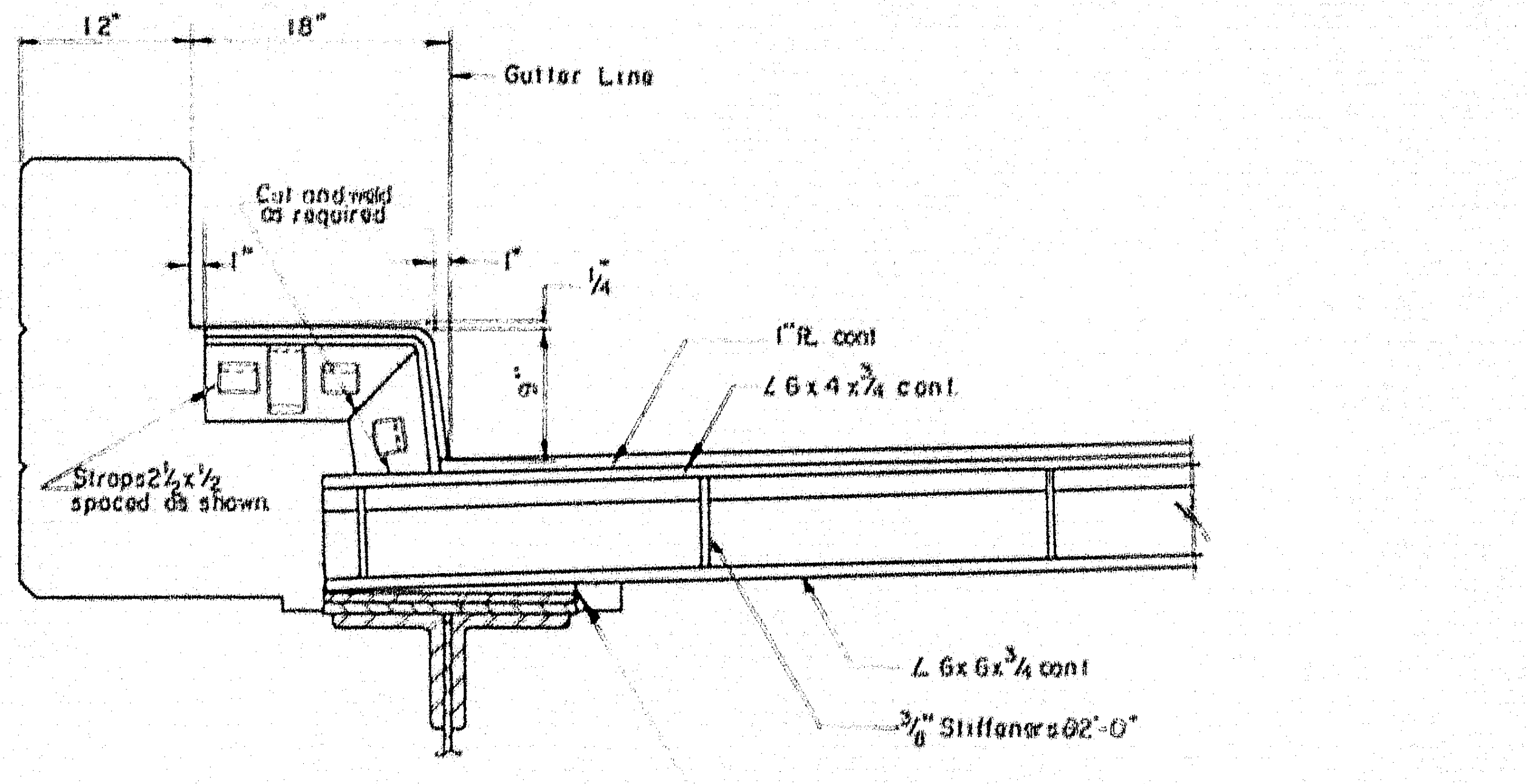
12"
18"
Gutter Line
Cut and weld as required
1"
1"
¼"
9"
1"R. cont
∠6x4x¾ cont.
Straps 2½x½ spaced as shown.
∠ 6x6x¾ cont
⅜" Stiffeners @2'-0"
Shim as required and weld or use H.S. bolts.

SECTION K-K
Scale 1" = 1'-0"

Notes: 1. 2" Bituminous Concrete Surfacing and Membrane Waterproofing are not in this contract.
2. All welds to be ⅜" fillets except as noted
3. Shop assemble Roadway Joint at Hinge. Fabricate to follow crown of roadway. Provide shipping device to maintain spacing and alignment. Do not paint sliding contact surfaces; rub with graphite. Same requirements for joint at safety walks.

THE CLARKESON ENG[illegible] CO., INC.

DESIGN	CHECK H.P.	[illegible] NO
DRAWN D.A.T.	APPROVED WAH - CJM	[illegible]

STATE HIGHWAY COMMISSION
INTERSTATE #95
OVER
MESSALONSKEE STREAM
& QUARRY ROAD (RELOC.)
IN THE CITY OF
WATERVILLE
KENNEBEC COUNTY
ROADWAY JOINTS

SHEET 23 OF 23 SHEETS
AUGUSTA, MAINE

78-195

INTERSTATE #95-WATERVILLE

B.P.R. REG. NO.	STATE	PROJECT NO.	SHEET NO.	TOTAL SHEETS
I	MAINE	I-95-6(23)	31	32

Southbound
℄

EMBANKMENT 574 CU. YD.

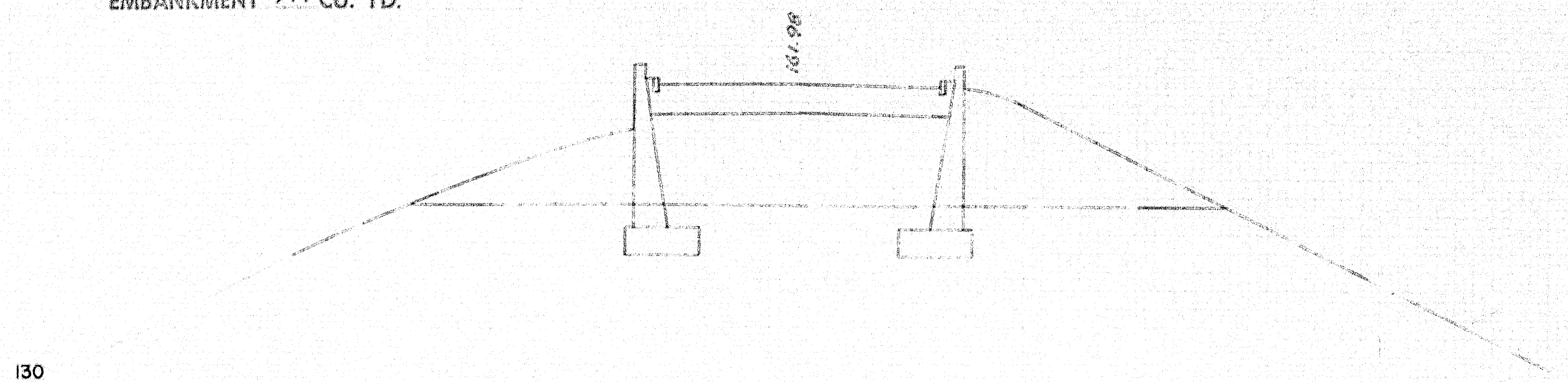

1048+50

EMBANKMENT 1365 CU. YD.

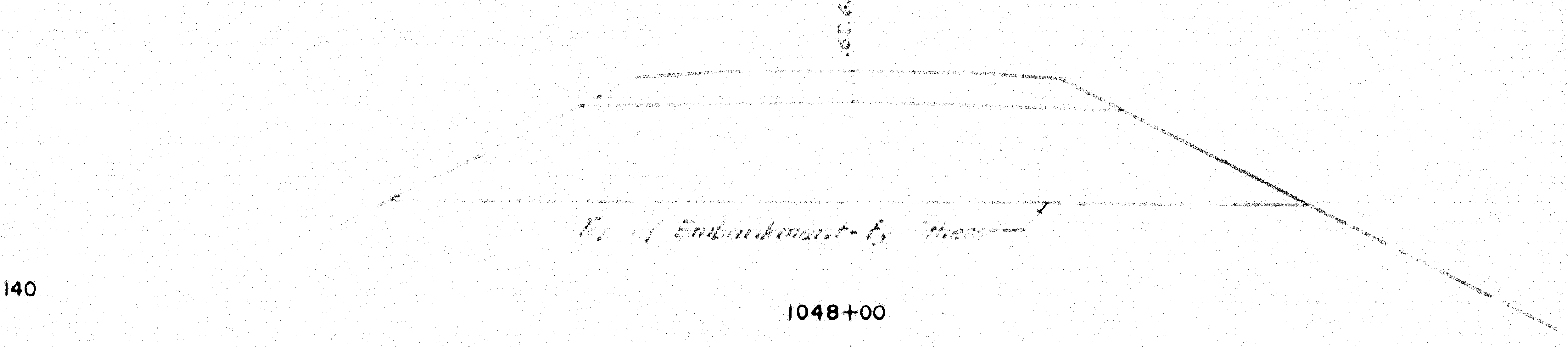
162.60
Top of Embankment - By Others
140

1048+00

EMBANKMENT 739 CU. YD.

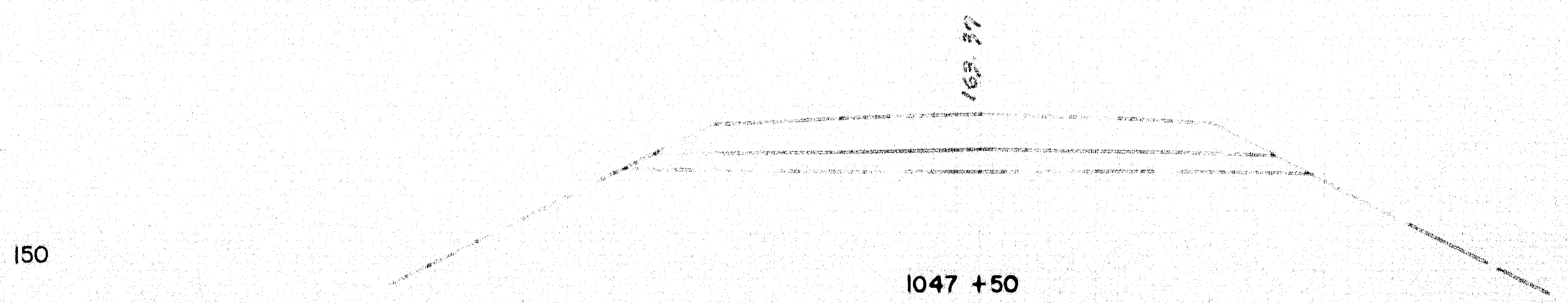

1047 +50

EMBANKMENT 46 CU. YD.

STA.1047+00 SOUTHBOUND
LIMIT OF WORK
℄

Northbound
℄

EMBANKMENT 200 CU. YD.

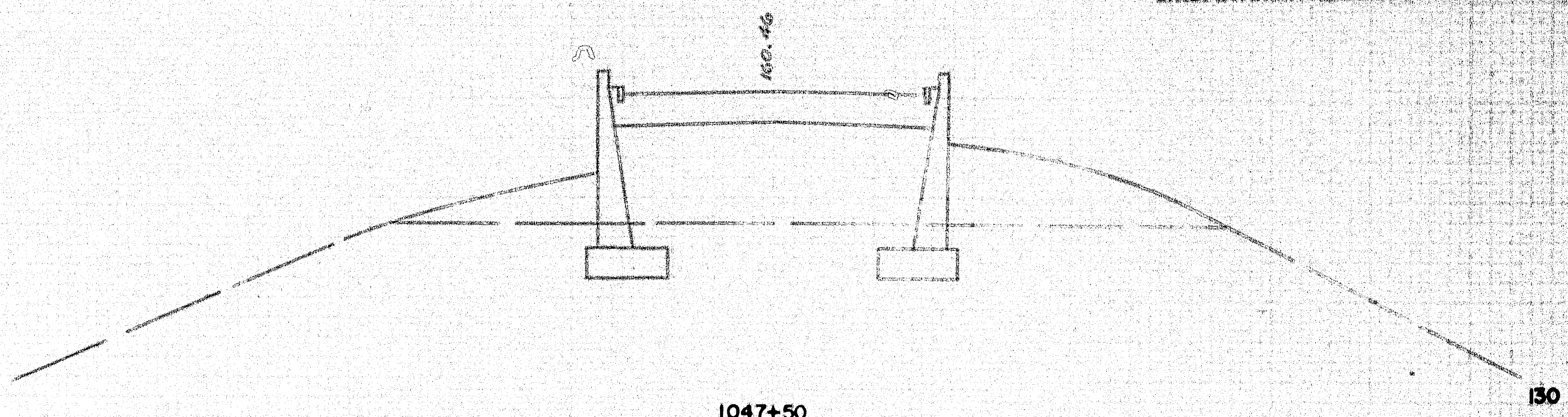

1047+50

EMBANKMENT 1152 CU. YD.

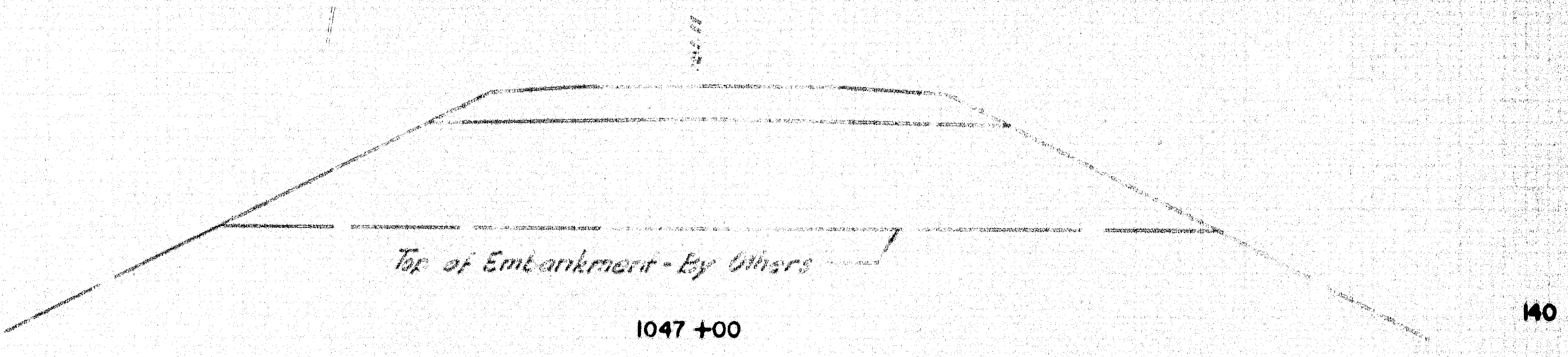
161.11
Top of Embankment - By Others
140

1047 +00

EMBANKMENT 741 CU. YD.

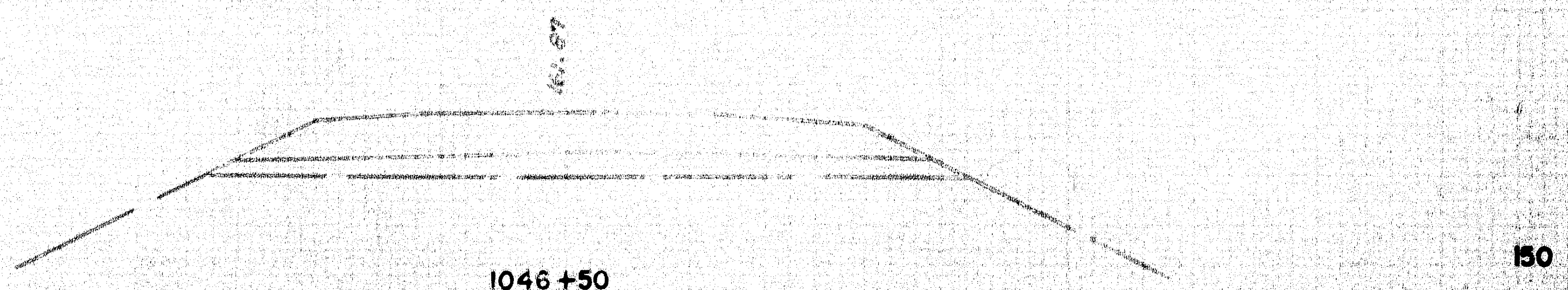

1046 +50

STA.1047+56 NORTHBOUND
BEGIN F.A.P. I-95-6(23) PART 2

STA.1046+00 NORTHBOUND
LIMIT OF WORK
℄

EMBANKMENT 44 CU. YD.

78-196

0 1 2 3 4 5 INCHES

INTERSTATE 95 - WATERVILLE

B.P.R. REG. NO.	STATE	PROJECT NO.	SHEET NO.	TOTAL SHEETS
1	MAINE	I-95-6(23)	32	32

Southbound

℄

STA. 1061+00 SOUTHBOUND
LIMIT OF WORK

EMBANKMENT 450 CU. YD.

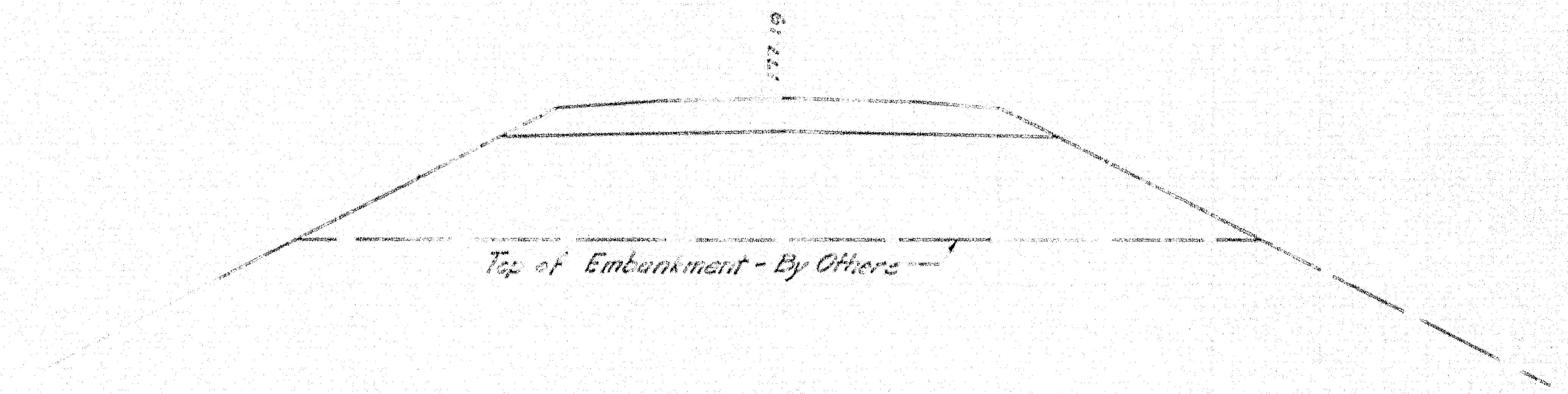
172.19
Top of Embankment - By Others
150

1059 +50

EMBANKMENT 1287 CU. YD.

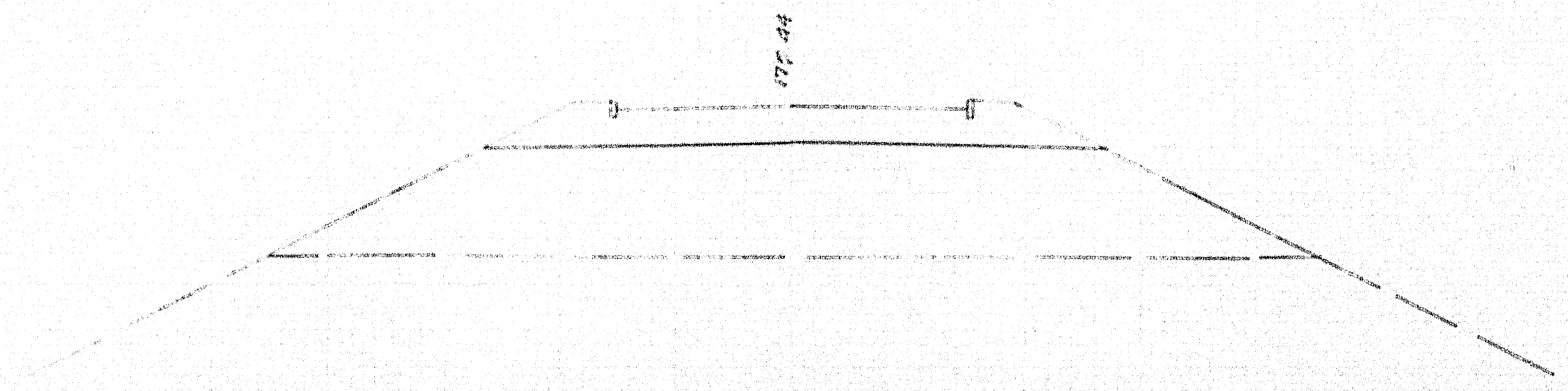

1059 +00

EMBANKMENT 255 CU. YD.

℄

Northbound

℄

STA. 1060+00 NORTHBOUND
LIMIT OF WORK

STA. 1057+80 NORTHBOUND
END F.A.P. I-95-6(23) PART 2

EMBANKMENT 658 CU. YD.

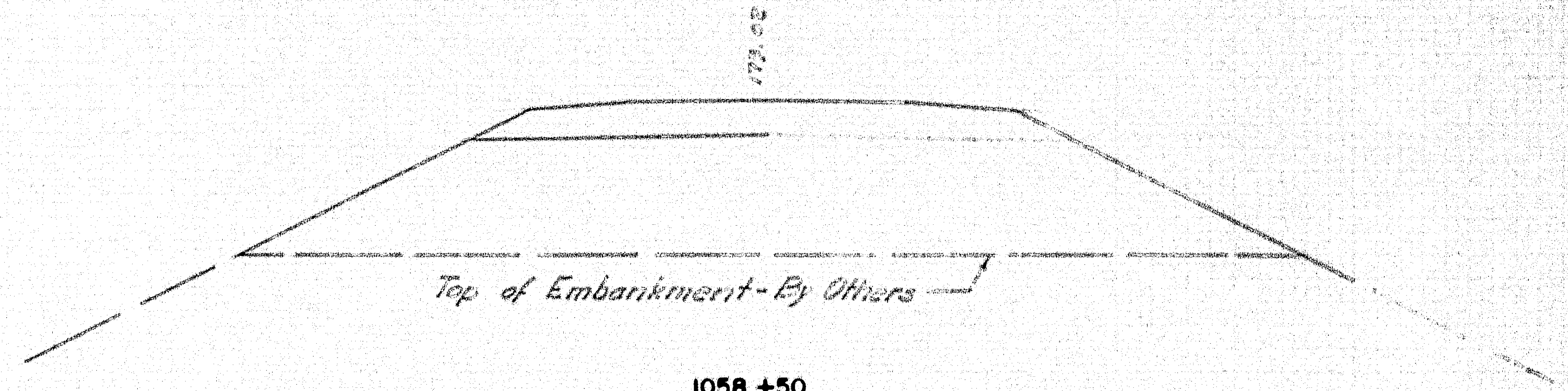
173.08
Top of Embankment - By Others
150

1058 +50

EMBANKMENT 1310 CU. YD.

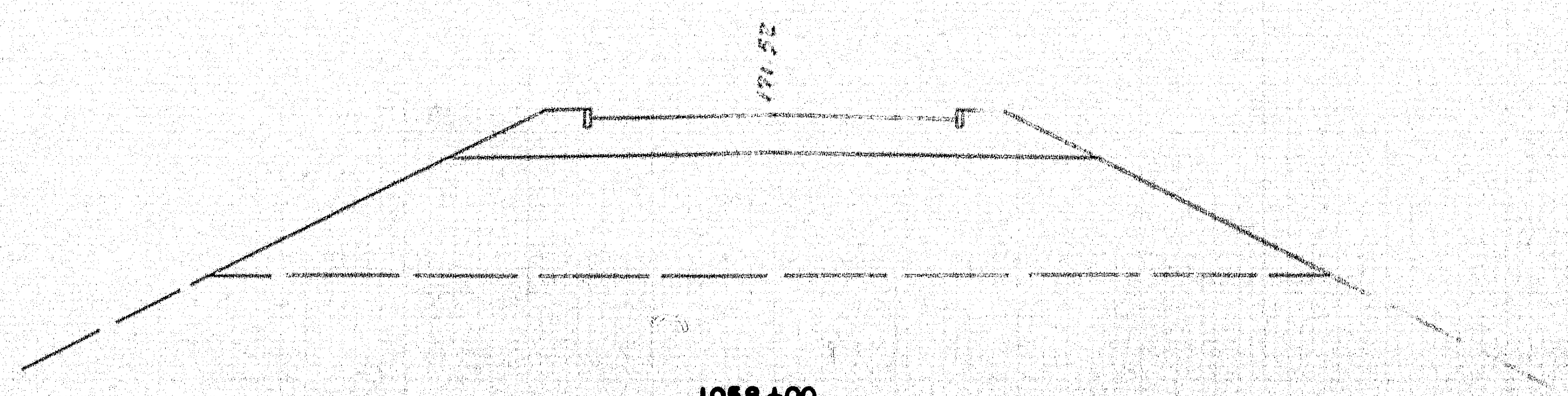

1058 +00

EMBANKMENT 526 CU. YD.

℄

78-197

0 1 2 3 4 5 INCHES

B.P.R. REG. NO.	STATE	PROJECT NO.	SHEET NO.	TOTAL SHEETS
1	MAINE	I-95-6(23)		

WATERVILLE INTERSTATE

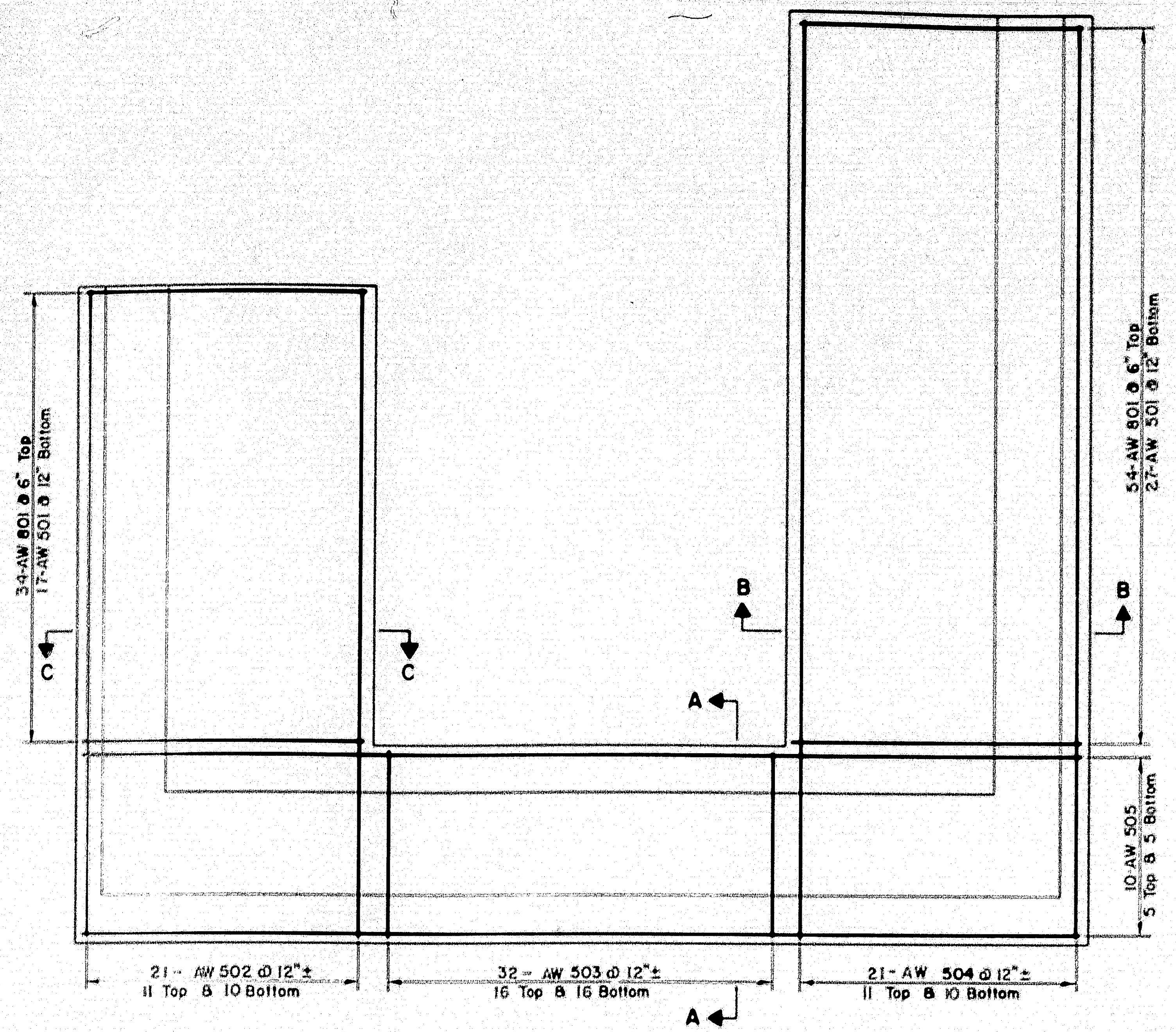
34-AW 801 @ 6" Top
17-AW 501 @ 12" Bottom
54-AW 801 @ 6" Top
27-AW 501 @ 12" Bottom
10-AW 505
5 Top & 5 Bottom
C
C
B
B
A
A
21 - AW 502 @ 12" ±
11 Top & 10 Bottom
32 - AW 503 @ 12" ±
16 Top & 16 Bottom
21 - AW 504 @ 12" ±
11 Top & 10 Bottom

FOOTING REINFORCEMENT WESTERLY ABUTMENTS

Scale: 1/4" = 1'-0"

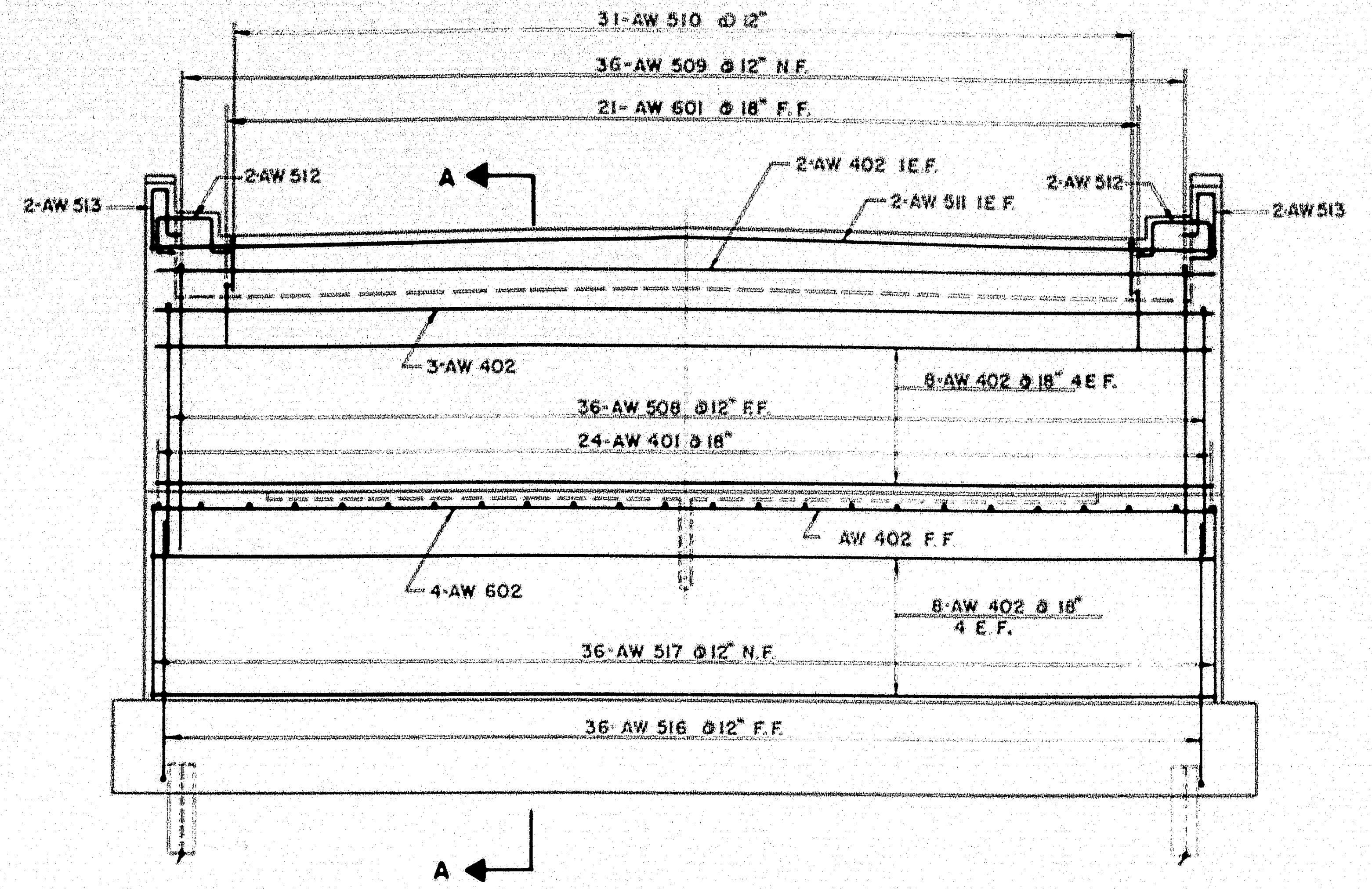
31-AW 510 @ 12"
36-AW 509 @ 12" N.F.
21-AW 601 @ 18" F.F.
2-AW 513
2-AW 512
A
2-AW 402 1 E.F.
2-AW 511 1 E.F.
2-AW 512
2-AW 513
3-AW 402
8-AW 402 @ 18" 4 E.F.
36-AW 508 @ 12" F.F.
24-AW 401 @ 18"
AW 402 F.F.
4-AW 602
8-AW 402 @ 18"
4 E.F.
36-AW 517 @ 12" N.F.
36-AW 516 @ 12" F.F.
A

ELEVATION WESTERLY ABUTMENT (NORTHBOUND)

Scale: 1/4" = 1'-0"

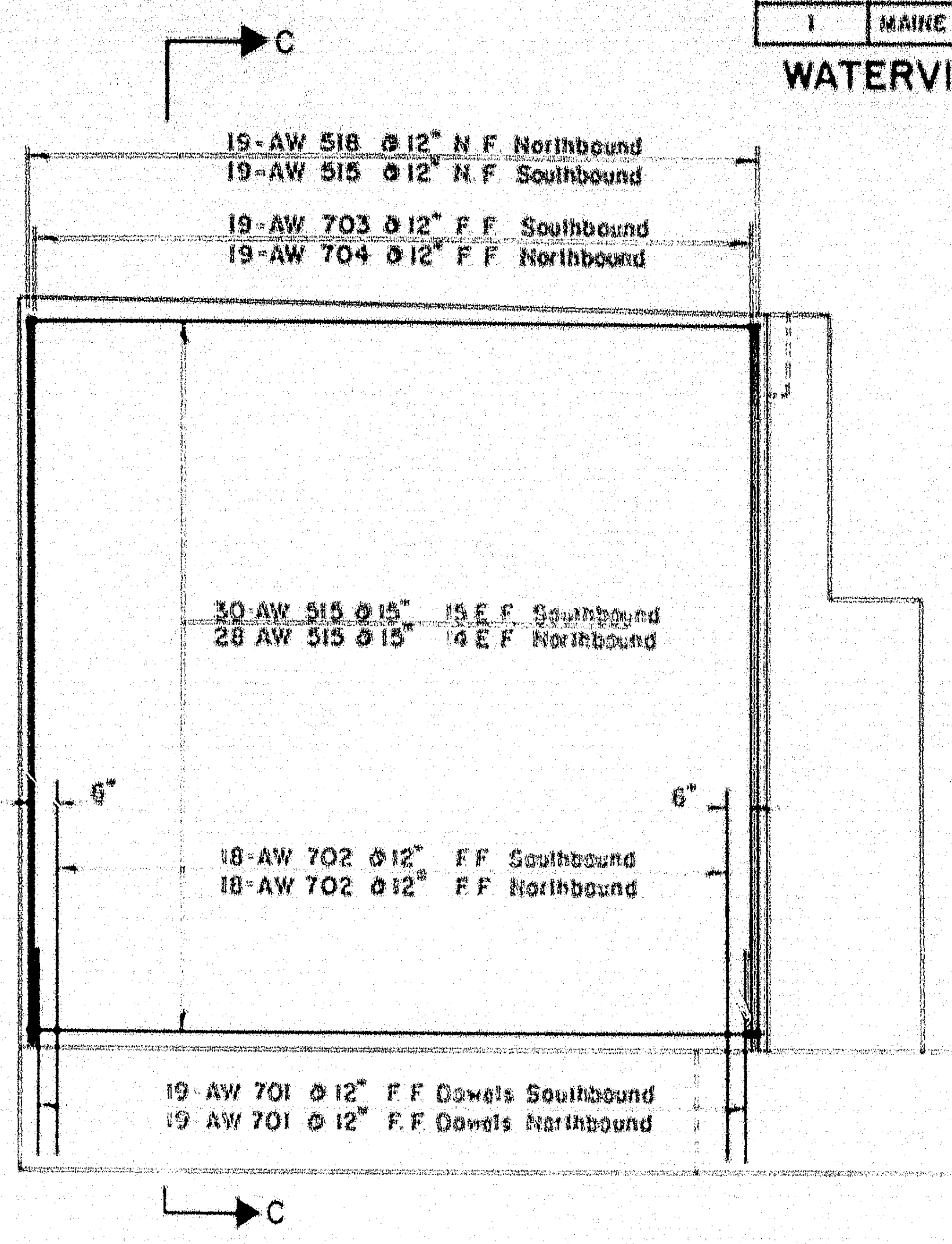
C
19-AW 518 @ 12" N.F. Northbound
19-AW 515 @ 12" N.F. Southbound
19-AW 703 @ 12" F.F. Southbound
19-AW 704 @ 12" F.F. Northbound
30-AW 515 @ 15" 15 E.F. Southbound
28 AW 515 @ 15" 14 E.F. Northbound
6"
6"
18-AW 702 @ 12" F.F. Southbound
18-AW 702 @ 12" F.F. Northbound
19-AW 701 @ 12" F.F. Dowels Southbound
19 AW 701 @ 12" F.F. Dowels Northbound
C

SOUTHERLY WALL REINFORCEMENT

Scale: 1/4" = 1'-0"

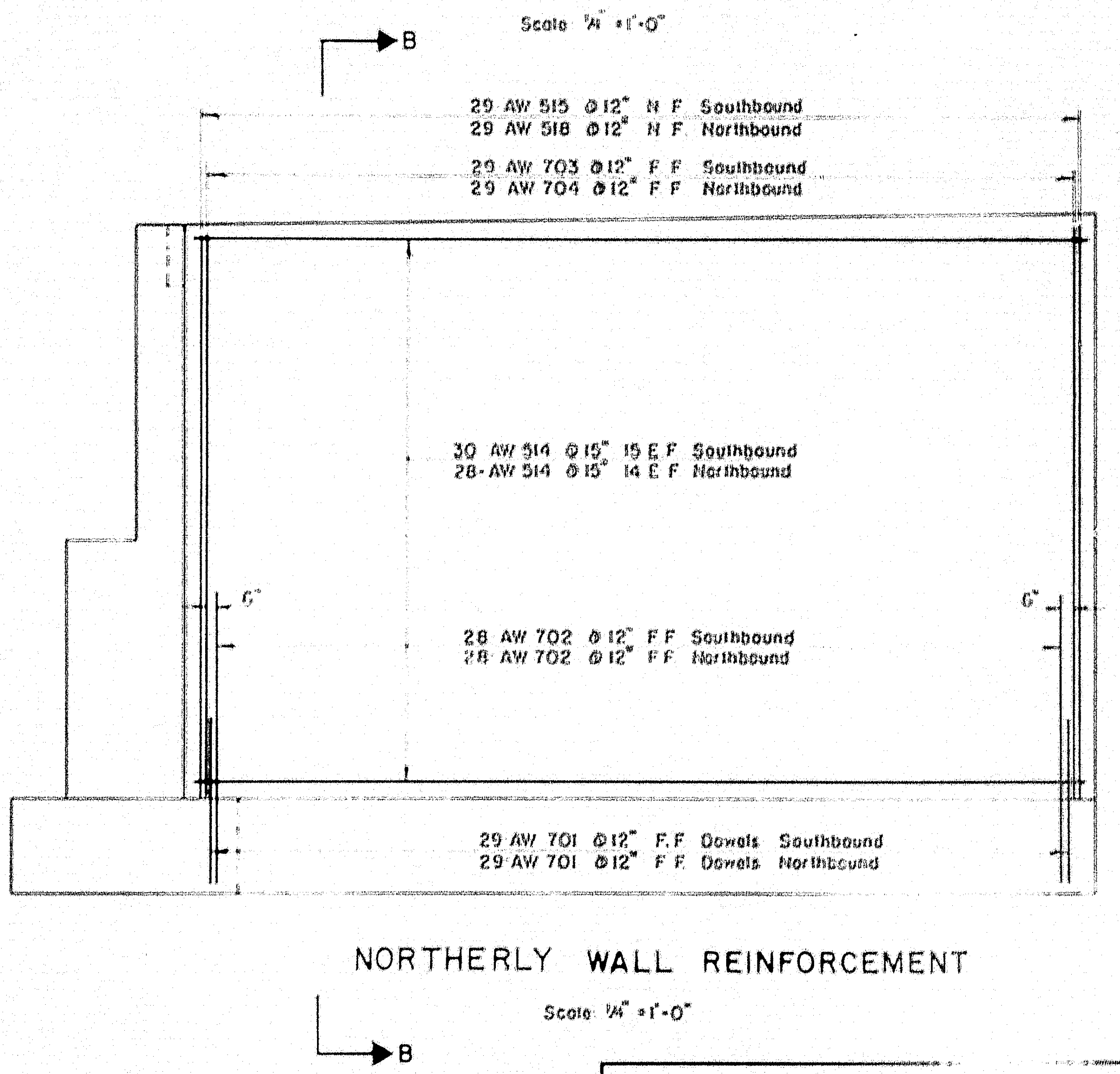
B
29 AW 515 @ 12" N.F. Southbound
29-AW 518 @ 12" N.F. Northbound
29 AW 703 @ 12" F.F. Southbound
29 AW 704 @ 12" F.F. Northbound
30 AW 514 @ 15" 15 E.F. Southbound
28-AW 514 @ 15" 14 E.F. Northbound
6"
6"
28 AW 702 @ 12" F.F. Southbound
28 AW 702 @ 12" F.F. Northbound
29 AW 701 @ 12" F.F. Dowels Southbound
29 AW 701 @ 12" F.F. Dowels Northbound
B

NORTHERLY WALL REINFORCEMENT

Scale: 1/4" = 1'-0"

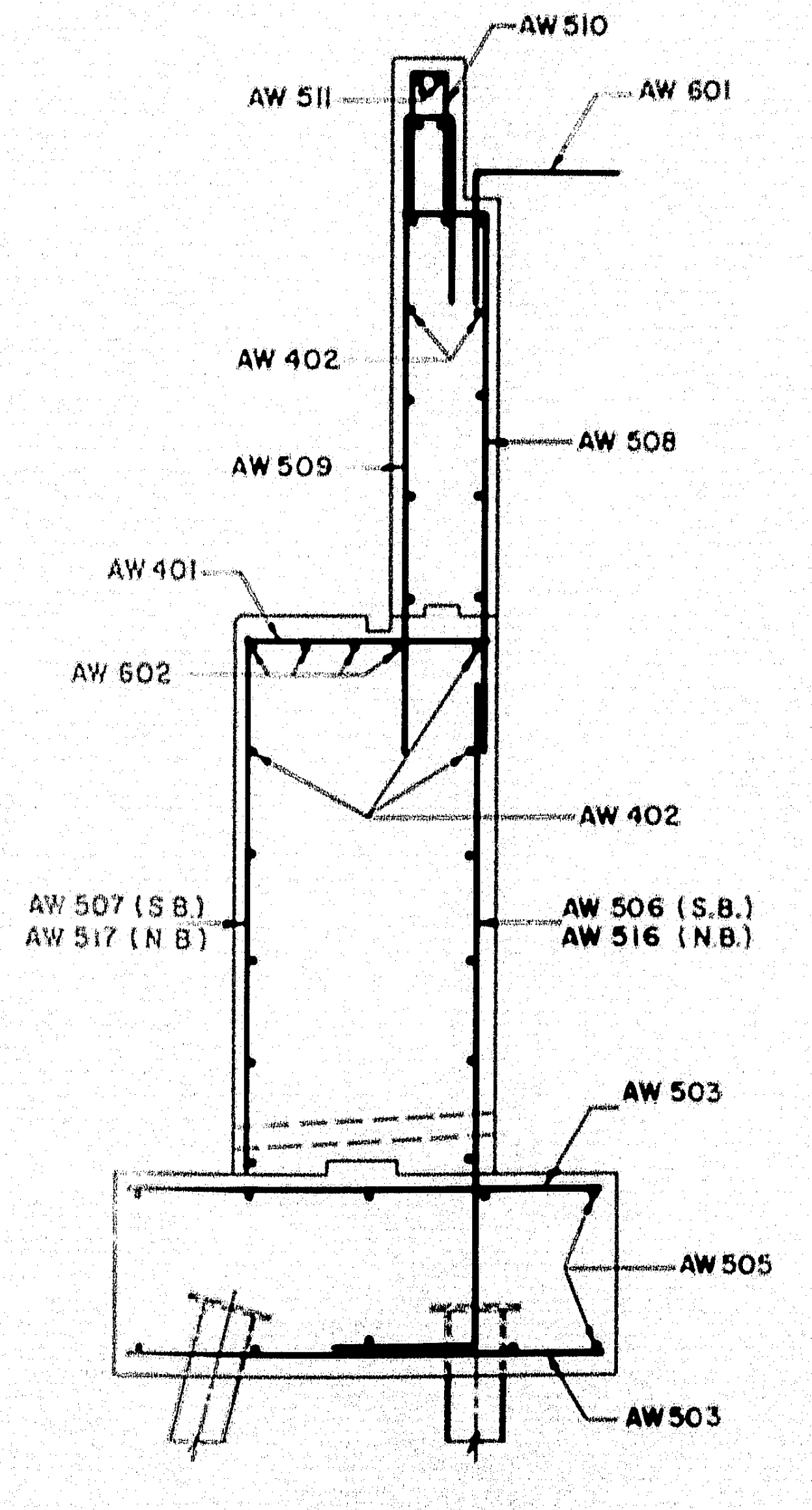
AW 510
AW 511
AW 601
AW 402
AW 509
AW 508
AW 401
AW 602
AW 402
AW 507 (S.B.)
AW 517 (N.B.)
AW 506 (S.B.)
AW 516 (N.B.)
AW 503
AW 505
AW 503

SECTION A-A

Scale: 3/8" = 1'-0"

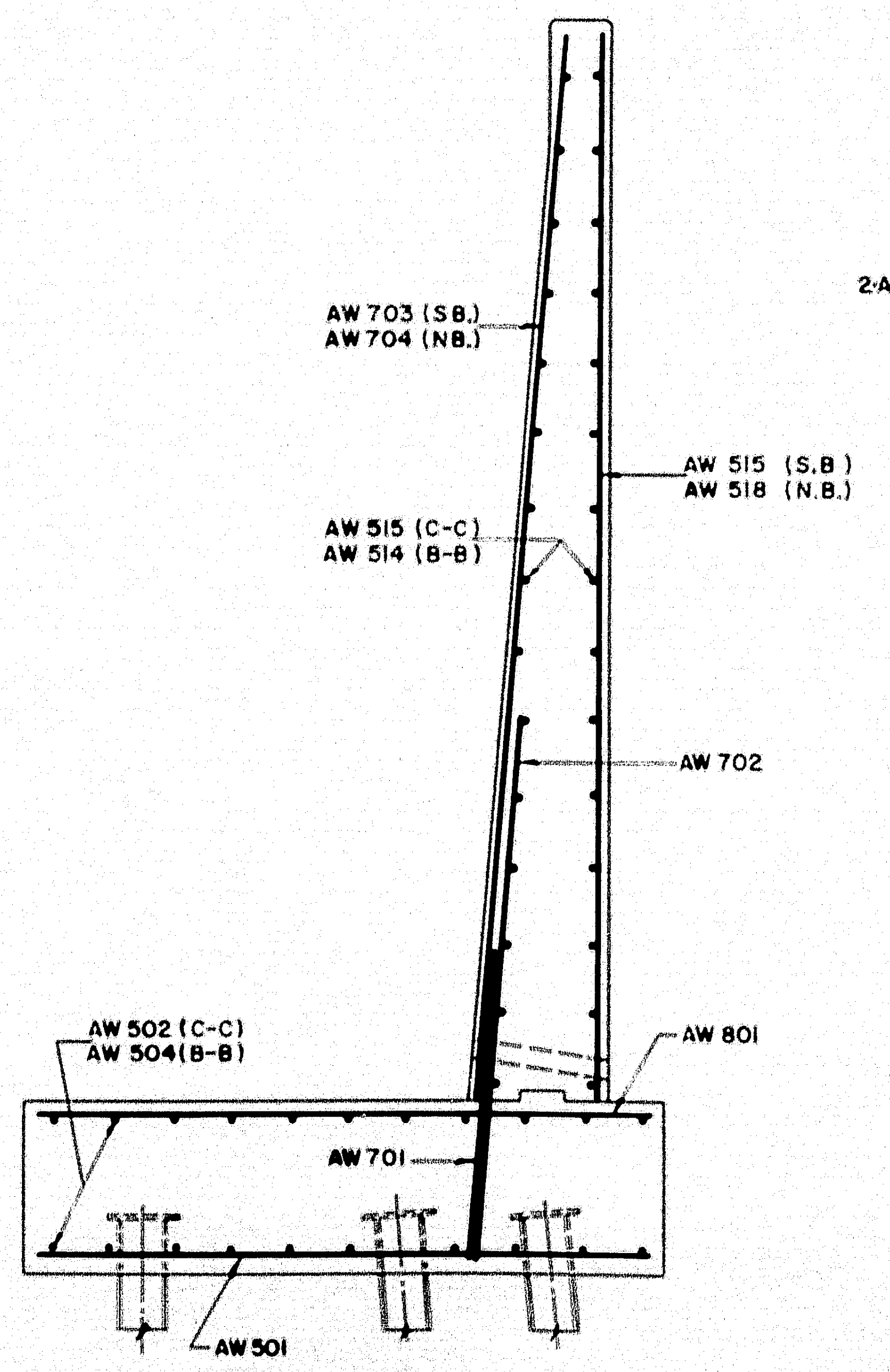
AW 703 (S.B.)
AW 704 (N.B.)
AW 515 (S.B.)
AW 518 (N.B.)
AW 515 (C-C)
AW 514 (B-B)
AW 702
AW 502 (C-C)
AW 504 (B-B)
AW 801
AW 701
AW 501

SECTION B-B

SECTION C-C SIMILAR EXCEPT AS NOTED

Scale 3/8" = 1'-0"

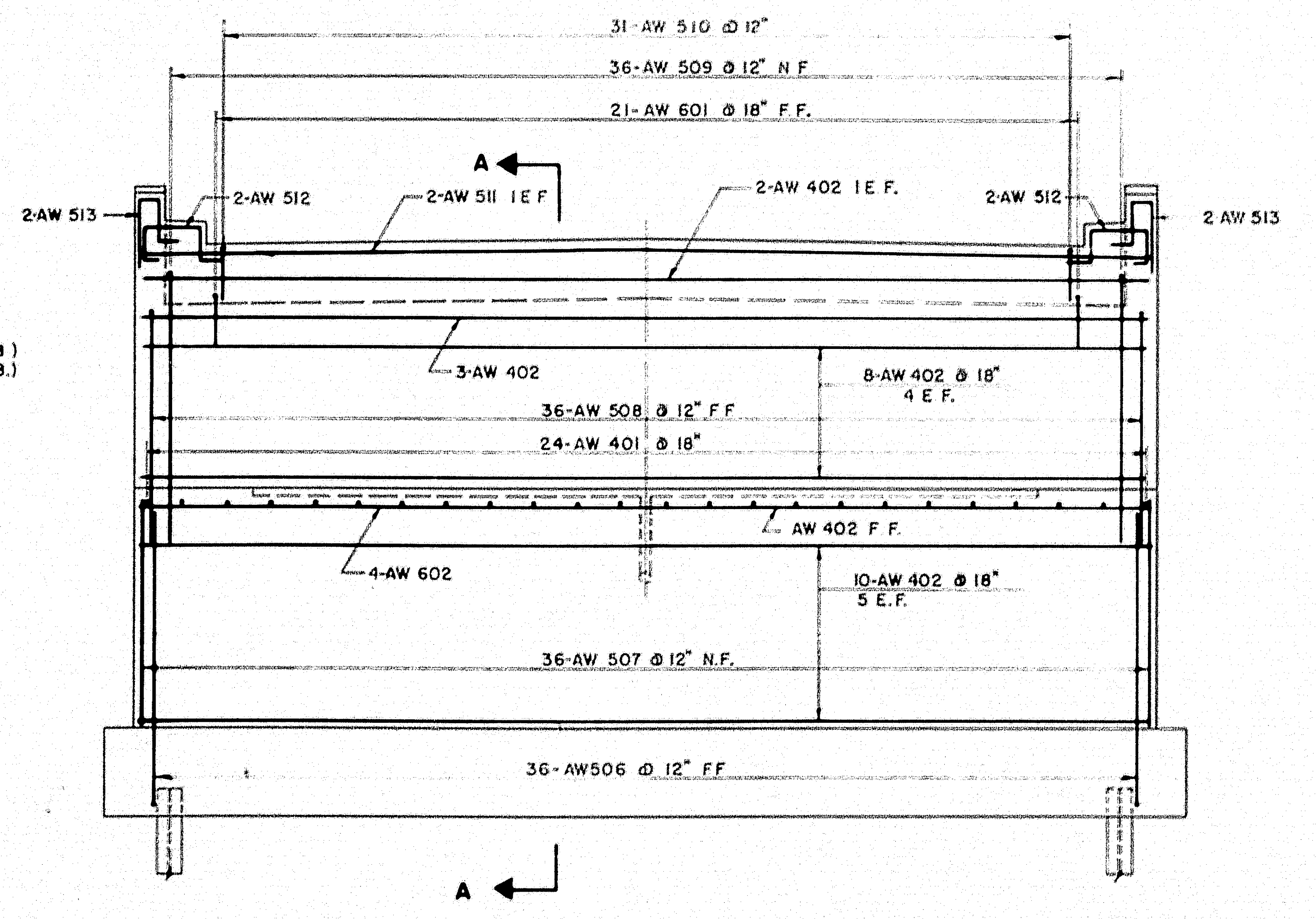
31-AW 510 @ 12"
36-AW 509 @ 12" N.F.
21-AW 601 @ 18" F.F.
A
2-AW 513
2-AW 512
2-AW 511 1 E.F.
2-AW 402 1 E.F.
2-AW 512
2 AW 513
3-AW 402
8-AW 402 @ 18"
4 E.F.
36-AW 508 @ 12" F.F.
24-AW 401 @ 18"
AW 402 F.F.
4-AW 602
10-AW 402 @ 18"
5 E.F.
36-AW 507 @ 12" N.F.
36-AW506 @ 12" F.F.
A

ELEVATION WESTERLY ABUTMENT (SOUTHBOUND)

Scale: 1/4" = 1'-0"

THE CLARKESON ENG[illegible] CO., INC.

DESIGN H. L.	CHECK H.P.
DRAWN E. K.	APPROVED WAH CJM

STATE HIGHWAY [illegible]SION

INTERSTATE #95
OVER
MESSALONSKEE STREAM
& QUARRY ROAD (RELOC.)
IN THE CITY OF
WATERVILLE
KENNEBEC COUNTY

ABUTMENT REINFORCEMENT

SHEET 1 OF 13 SHEETS AUGUSTA, MAINE

78-198

0 1 2 3 4 5 INCHES

F.P.R. REG. NO.	STATE	PROJECT NO.	SHEET NO.	TOTAL SHEETS
1	MAINE	I-95-6 (23)		

WATERVILLE INTERSTATE

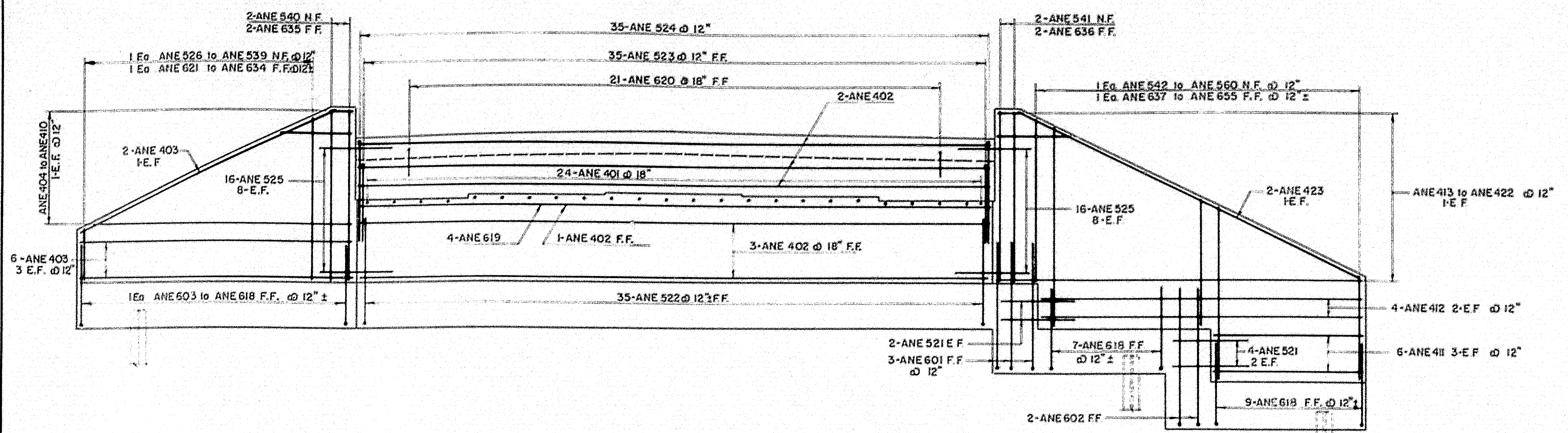

2-ANE 540 N.F.
2-ANE 635 F.F.
1 Ea. ANE 526 to ANE 539 N.F. @ 12"
1 Ea. ANE 621 to ANE 634 F.F. @ 12"±
35-ANE 524 @ 12"
35-ANE 523 @ 12" F.F.
21-ANE 620 @ 18" F.F.
2-ANE 402
2-ANE 541 N.F.
2-ANE 636 F.F.
1 Ea. ANE 542 to ANE 560 N.F. @ 12"
1 Ea. ANE 637 to ANE 655 F.F. @ 12"±
ANE404 to ANE410 1-E.F. @ 12"
2-ANE 403 1-E.F.
16-ANE 525 8-E.F.
24-ANE 401 @ 18"
4-ANE 619
1-ANE 402 F.F.
3-ANE 402 @ 18" F.F.
6-ANE 403 3 E.F. @ 12"
1 Ea. ANE 603 to ANE 618 F.F. @ 12"±
35-ANE 522 @ 12" F.F.
16-ANE 525 8-E.F.
2-ANE 423 1-E.F.
ANE 413 to ANE 422 @ 12" 1-E.F.
4-ANE 412 2-E.F. @ 12"
6-ANE 411 3-E.F. @ 12"
2-ANE 521 E.F.
3-ANE 601 F.F. @ 12"
7-ANE 616 F.F. @ 12"±
4-ANE 521 2 E.F.
9-ANE 618 F.F. @ 12"±
2-ANE 602 F.F.

ELEVATION
NORTHEASTERLY ABUTMENT
Scale: 1/4" = 1'-0"

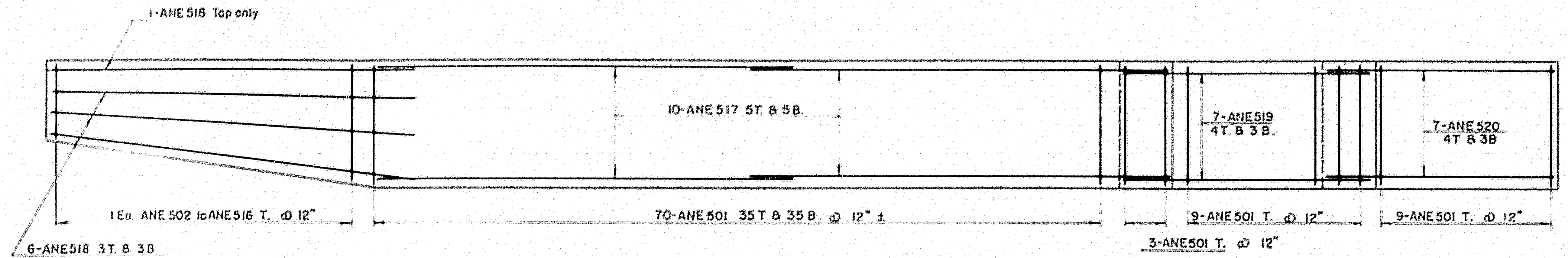

1-ANE 518 Top only
10-ANE 517 5T. & 5B.
7-ANE 519 4T. & 3B.
7-ANE 520 4T. & 3B.
1 Ea. ANE 502 to ANE 516 T. @ 12"
70-ANE 501 35 T. & 35 B. @ 12"±
9-ANE 501 T. @ 12"
9-ANE 501 T. @ 12"
3-ANE 501 T. @ 12"
6-ANE 518 3T. & 3B.

FOOTING PLAN NORTHEASTERLY ABUTMENT
Scale: 1/4" = 1'-0"

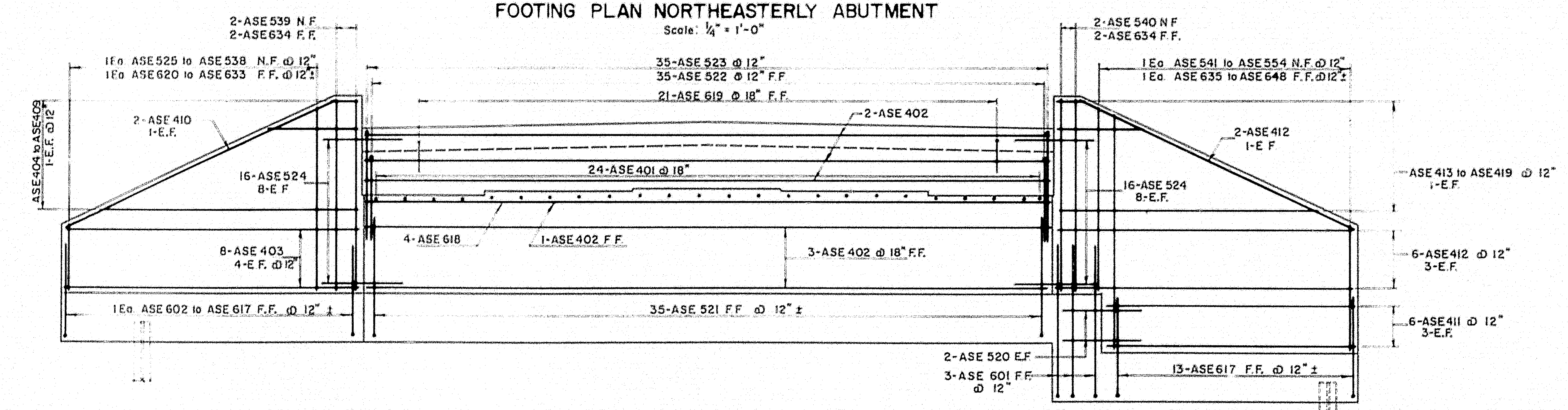

2-ASE 539 N.F.
2-ASE 634 F.F.
1 Ea. ASE 525 to ASE 538 N.F. @ 12"
1 Ea. ASE 620 to ASE 633 F.F. @ 12"±
35-ASE 523 @ 12"
35-ASE 522 @ 12" F.F.
21-ASE 619 @ 18" F.F.
2-ASE 402
2-ASE 540 N.F.
2-ASE 634 F.F.
1 Ea. ASE 541 to ASE 554 N.F. @ 12"
1 Ea. ASE 635 to ASE 648 F.F. @ 12"±
ASE 404 to ASE 409 1-E.F. @ 12"
2-ASE 410 1-E.F.
16-ASE 524 8-E.F.
24-ASE 401 @ 18"
4-ASE 618
1-ASE 402 F.F.
3-ASE 402 @ 18" F.F.
8-ASE 403 4-E.F. @ 12"
1 Ea. ASE 602 to ASE 617 F.F. @ 12"±
35-ASE 521 F.F. @ 12"±
2-ASE 412 1-E.F.
16-ASE 524 8-E.F.
ASE 413 to ASE 419 @ 12" 1-E.F.
6-ASE 412 @ 12" 3-E.F.
6-ASE 411 @ 12" 3-E.F.
2-ASE 520 E.F.
3-ASE 601 F.F. @ 12"
13-ASE 617 F.F. @ 12"±

ELEVATION
SOUTHEASTERLY ABUTMENT
Scale: 1/4" = 1'-0"

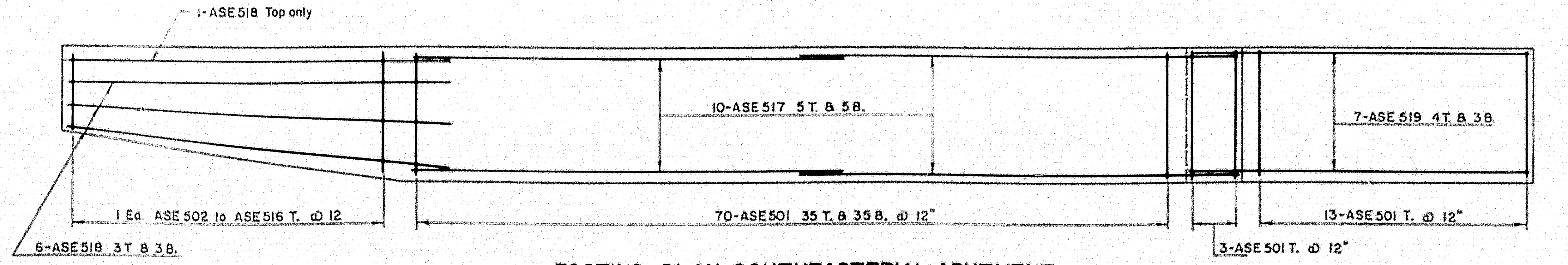

1-ASE 518 Top only
10-ASE 517 5T. & 5B.
7-ASE 519 4T. & 3B.
1 Ea. ASE 502 to ASE 516 T. @ 12
70-ASE 501 35 T. & 35 B. @ 12"
13-ASE 501 T. @ 12"
3-ASE 501 T. @ 12"
6-ASE 518 3T. & 3B.

FOOTING PLAN SOUTHEASTERLY ABUTMENT
Scale: 1/4" = 1'-0"

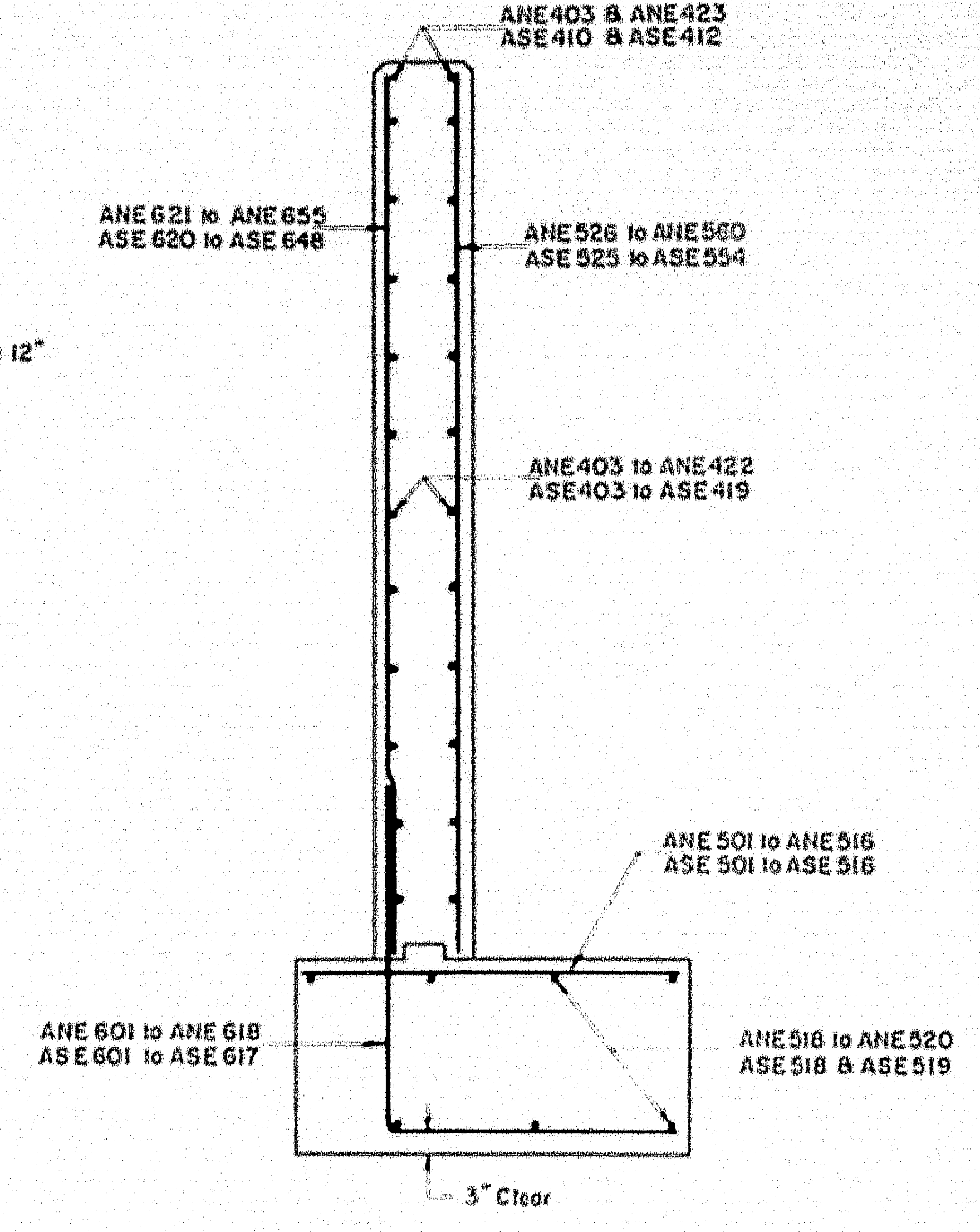

ANE 403 & ANE 423
ASE 410 & ASE 412
ANE 621 to ANE 655
ASE 620 to ASE 648
ANE 526 to ANE 560
ASE 525 to ASE 554
ANE 403 to ANE 422
ASE 403 to ASE 419
ANE 501 to ANE 516
ASE 501 to ASE 516
ANE 601 to ANE 618
ASE 601 to ASE 617
ANE 518 to ANE 520
ASE 518 & ASE 519
3" Clear

TYPICAL WINGWALL SECTION
Scale 1/2" = 1'-0"

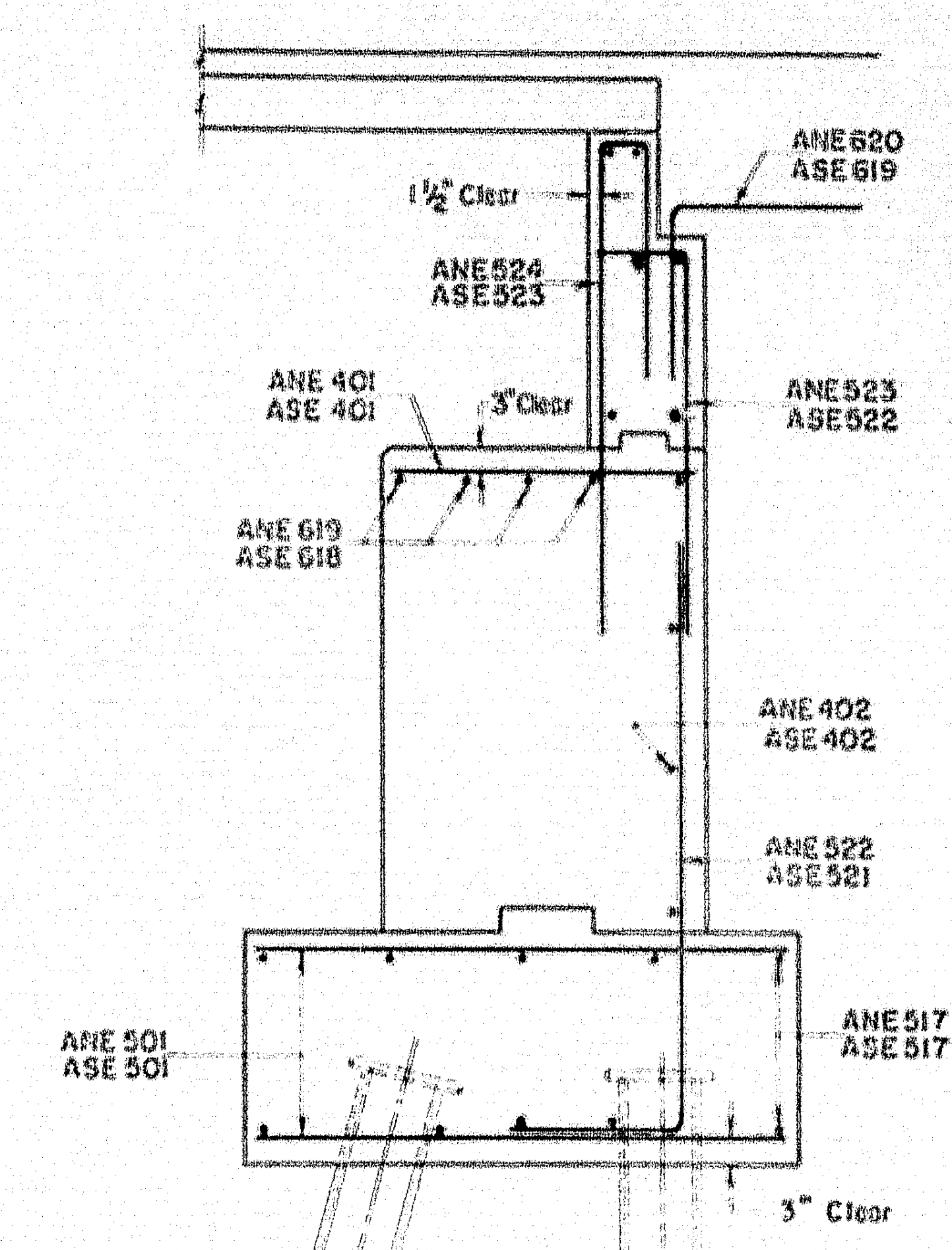

ANE 620
ASE 619
1½" Clear
ANE 524
ASE 523
ANE 401
ASE 401
3" Clear
ANE 523
ASE 522
ANE 619
ASE 618
ANE 402
ASE 402
ANE 522
ASE 521
ANE 501
ASE 501
ANE 517
ASE 517
3" Clear

TYPICAL ABUTMENT SECTION
Scale 1/2" = 1'-0"

Note: Reinforcing cover to be 2" unless otherwise noted

THE CLARKESON ENG[illegible] CO., INC.
DESIGN H.L. & H.P.
DRAWN S.A.L.
CHECK [illegible]
APPROVED [illegible]
[illegible] NO.
[illegible]
STATE HIGHWAY [illegible]SSION
INTERSTATE #95
OVER
MESSALONSKEE STREAM
& QUARRY ROAD (RELOC.)
IN THE CITY OF
WATERVILLE
KENNEBEC COUNTY
ABUTMENT REINFORCEMENT
SHEET 2 OF 13 SHEETS
AUGUSTA, MAINE

78-199

0 1 2 3 4 5 INCHES

B.P.R. REG. NO.	STATE	PROJECT NO.	SHEET NO.	TOTAL SHEETS
1	MAINE	I-95-6(23)		

WATERVILLE INTERSTATE

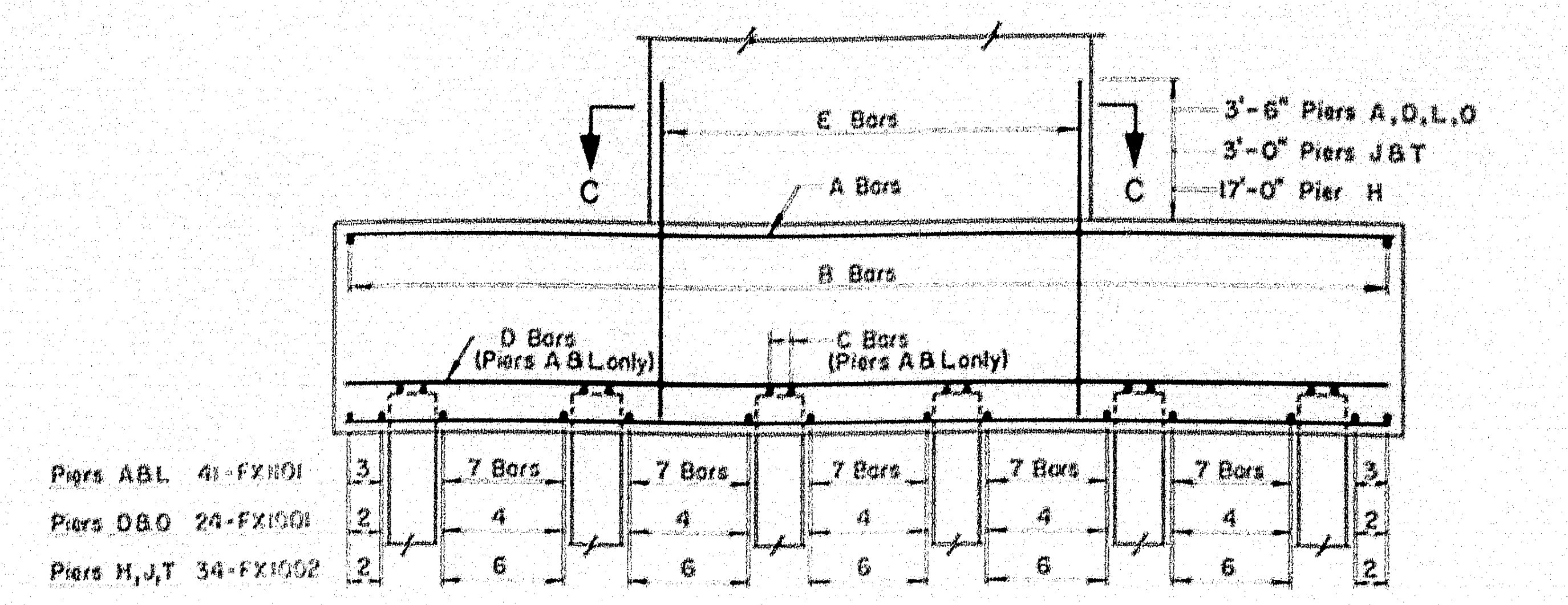
E Bars
A Bars
B Bars
C
C
3'-6" Piers A,D,L,O
3'-0" Piers J&T
17'-0" Pier H
D Bars (Piers A & L only)
C Bars (Piers A & L only)
Piers A&L 41-FX1101
Piers D&O 24-FX1001
Piers H,J,T 34-FX1002
7 Bars
4
6
3
2

SECTION A-A PIERS A,D,H,J,L,O & T

Scale 1/4" = 1'-0"

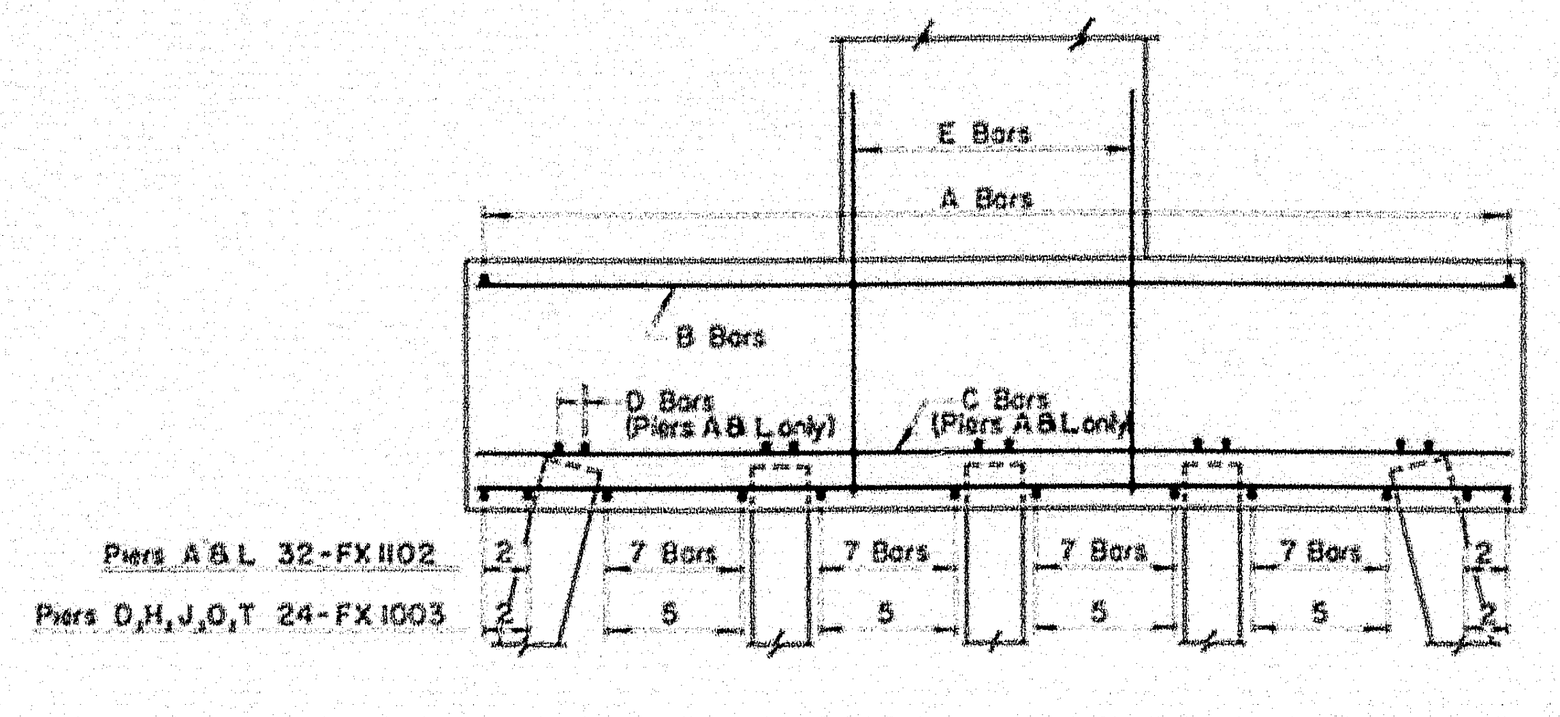
E Bars
A Bars
B Bars
D Bars (Piers A & L only)
C Bars (Piers A & L only)
Piers A&L 32-FX1102
Piers D,H,J,O,T 24-FX1003
7 Bars
5
2

SECTION B-B PIERS A,D,H,J,L,O & T

Scale 1/4" = 1'-0"

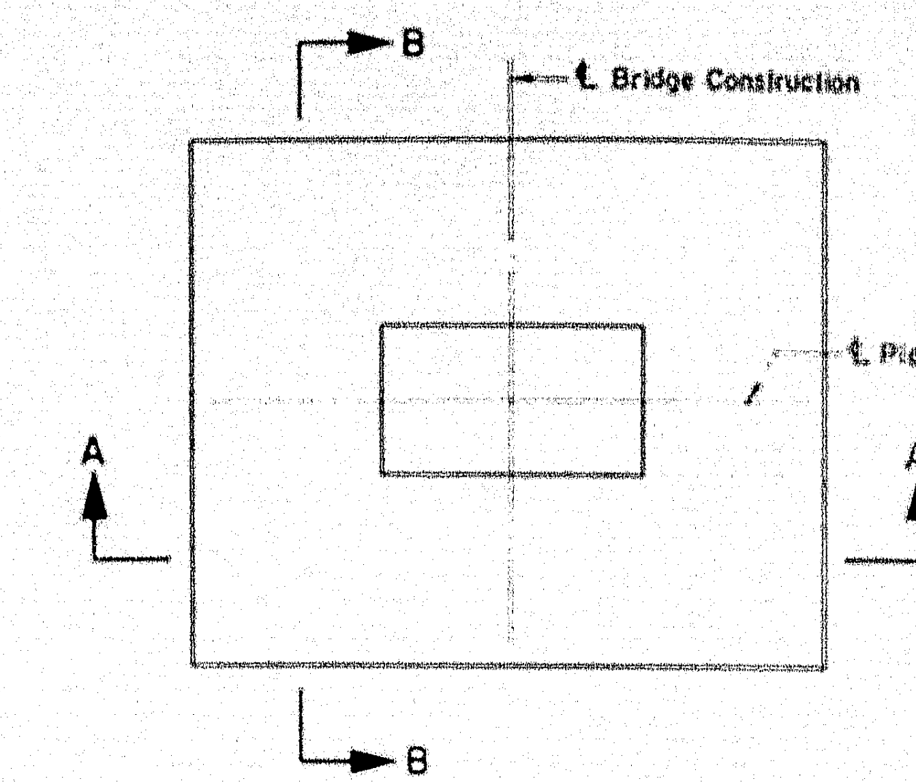
B
B
A
A
℄ Bridge Construction
℄ Pier

FOOTING PLAN

Scale 1/8" = 1'-0"

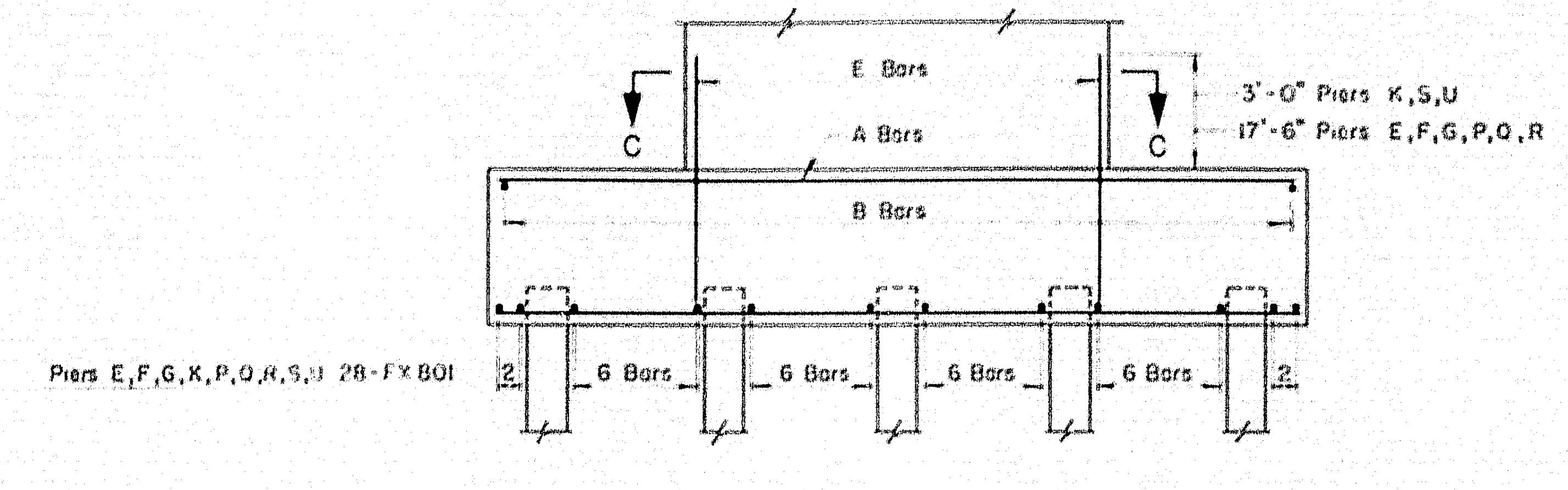
E Bars
A Bars
B Bars
C
C
3'-0" Piers K,S,U
17'-6" Piers E,F,G,P,Q,R
Piers E,F,G,K,P,Q,R,S,U 28-FX801
6 Bars
2

SECTION A-A PIERS E,F,G,K,P,Q,R,S & U

Scale 1/4" = 1'-0"

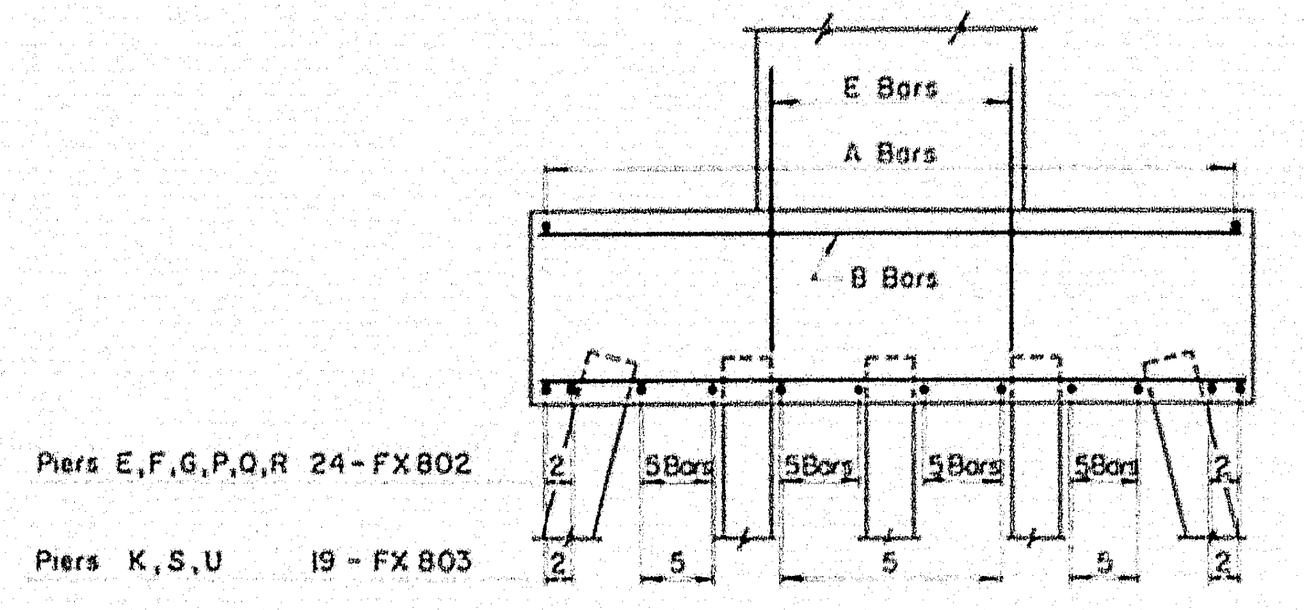
E Bars
A Bars
B Bars
Piers E,F,G,P,Q,R 24-FX802
Piers K,S,U 19-FX803
5 Bars
5
2

SECTION B-B PIERS E,F,G,K,P,Q,R,S & U

Scale 1/4" = 1'-0"

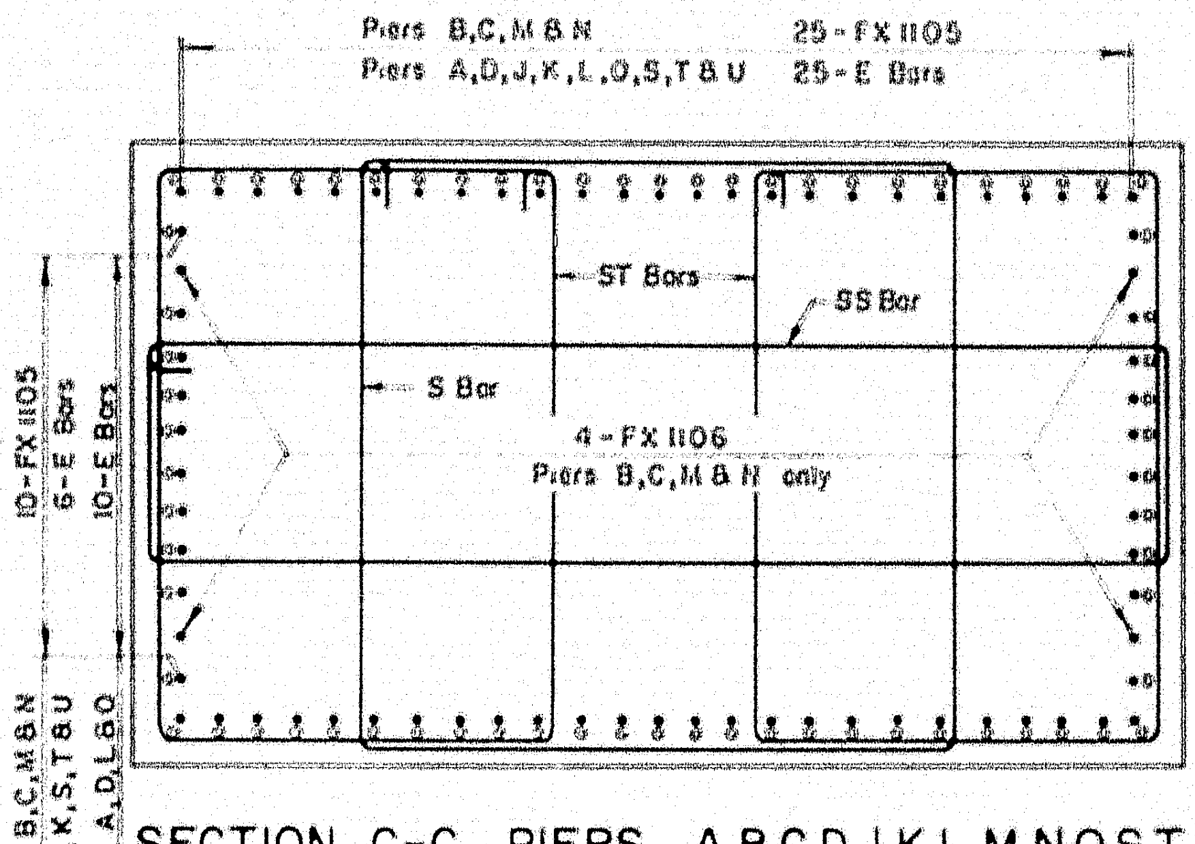
Piers B,C,M & N 25-FX1105
Piers A,D,J,K,L,O,S,T & U 25-E Bars
ST Bars
SS Bar
S Bar
4-FX1106
Piers B,C,M & N only
10-FX1105
6-E Bars
10-E Bars
Piers B,C,M & N
Piers J,K,S,T & U
Piers A,D,L & O

SECTION C-C PIERS A,B,C,D,J,K,L,M,N,O,S,T & U

Scale 1/2" = 1'-0"

Note See Sheet No 11 for column reinforcing

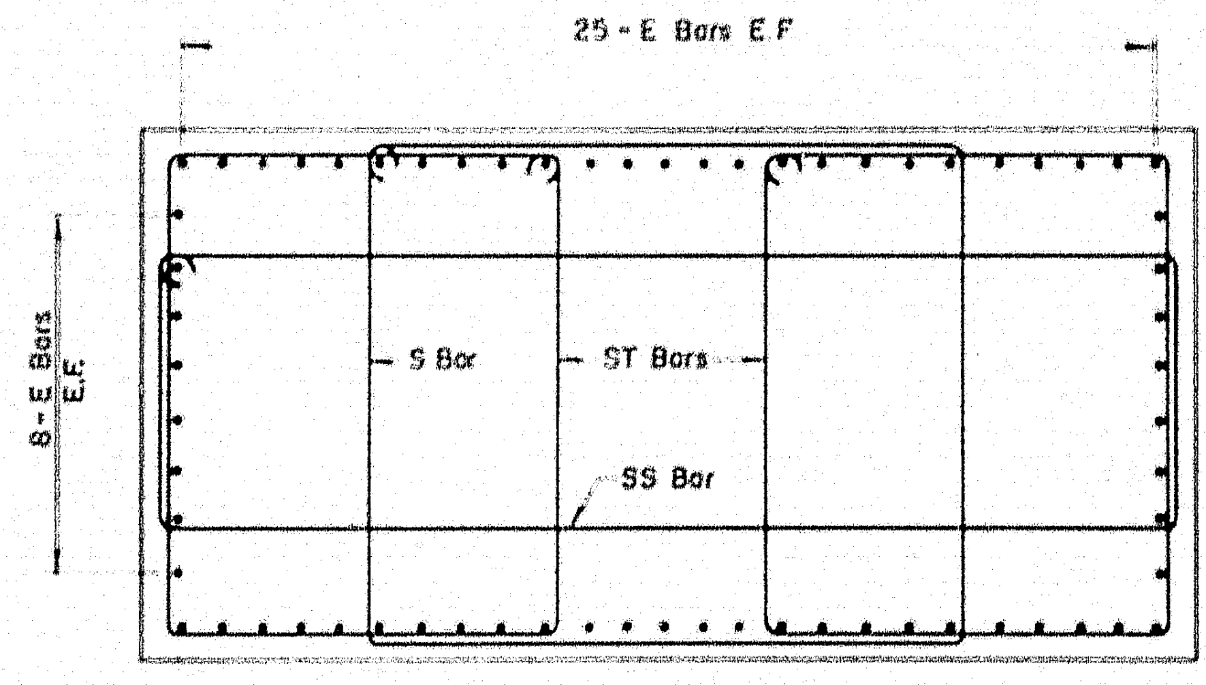
25-E Bars E.F.
8-E Bars E.F.
S Bar
ST Bars
SS Bar

SECTION C-C PIERS E,F,G,H,P,Q & R

Scale 1/2" = 1'-0"

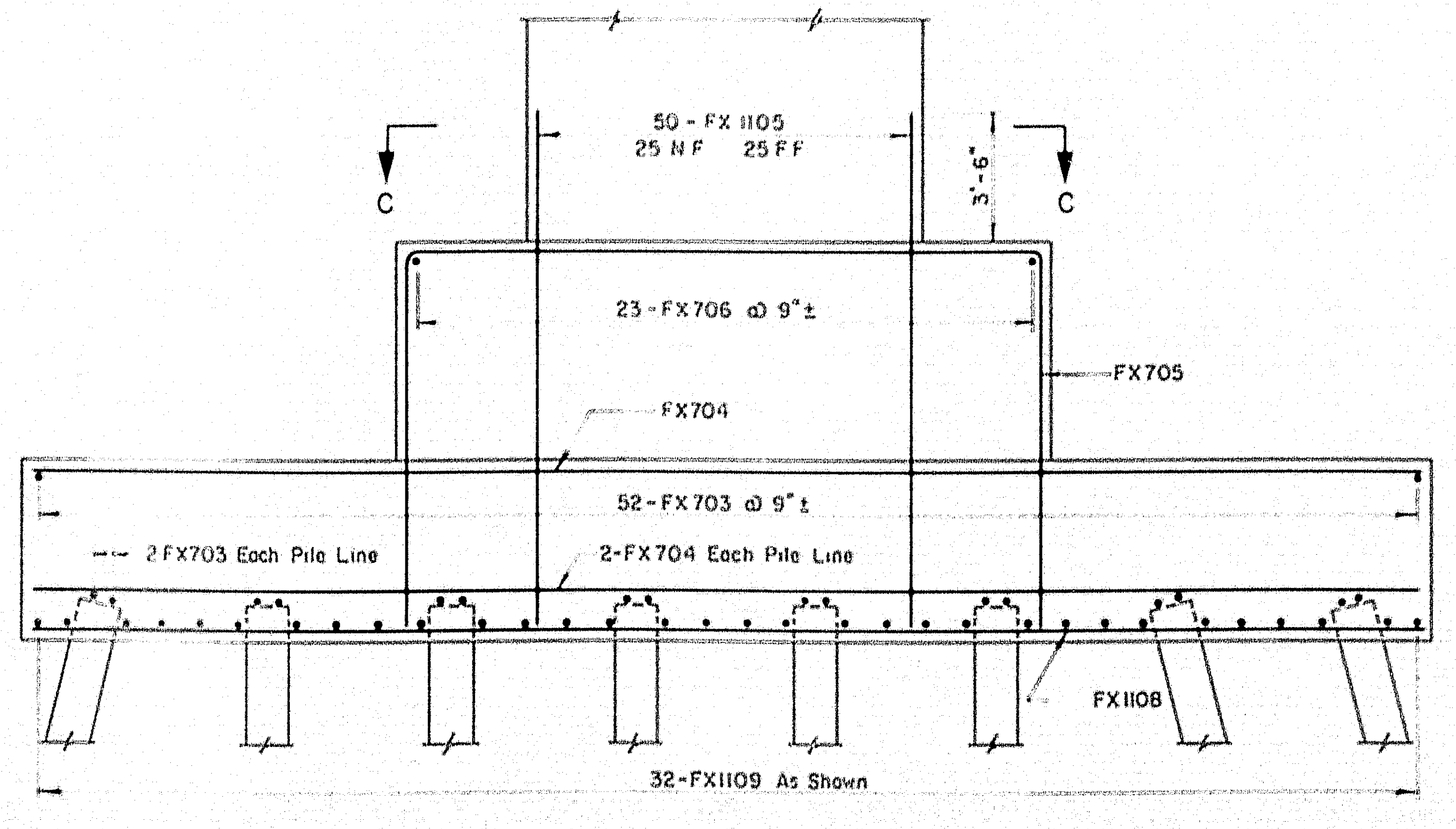
C
C
50-FX1105
25 NF 25 FF
3'-6"
23-FX706 @ 9"±
FX705
FX704
52-FX703 @ 9"±
2-FX703 Each Pile Line
2-FX704 Each Pile Line
FX1108
32-FX1109 As Shown

SECTION A-A PIERS B,C,M & N

Scale 1/4" = 1'-0"

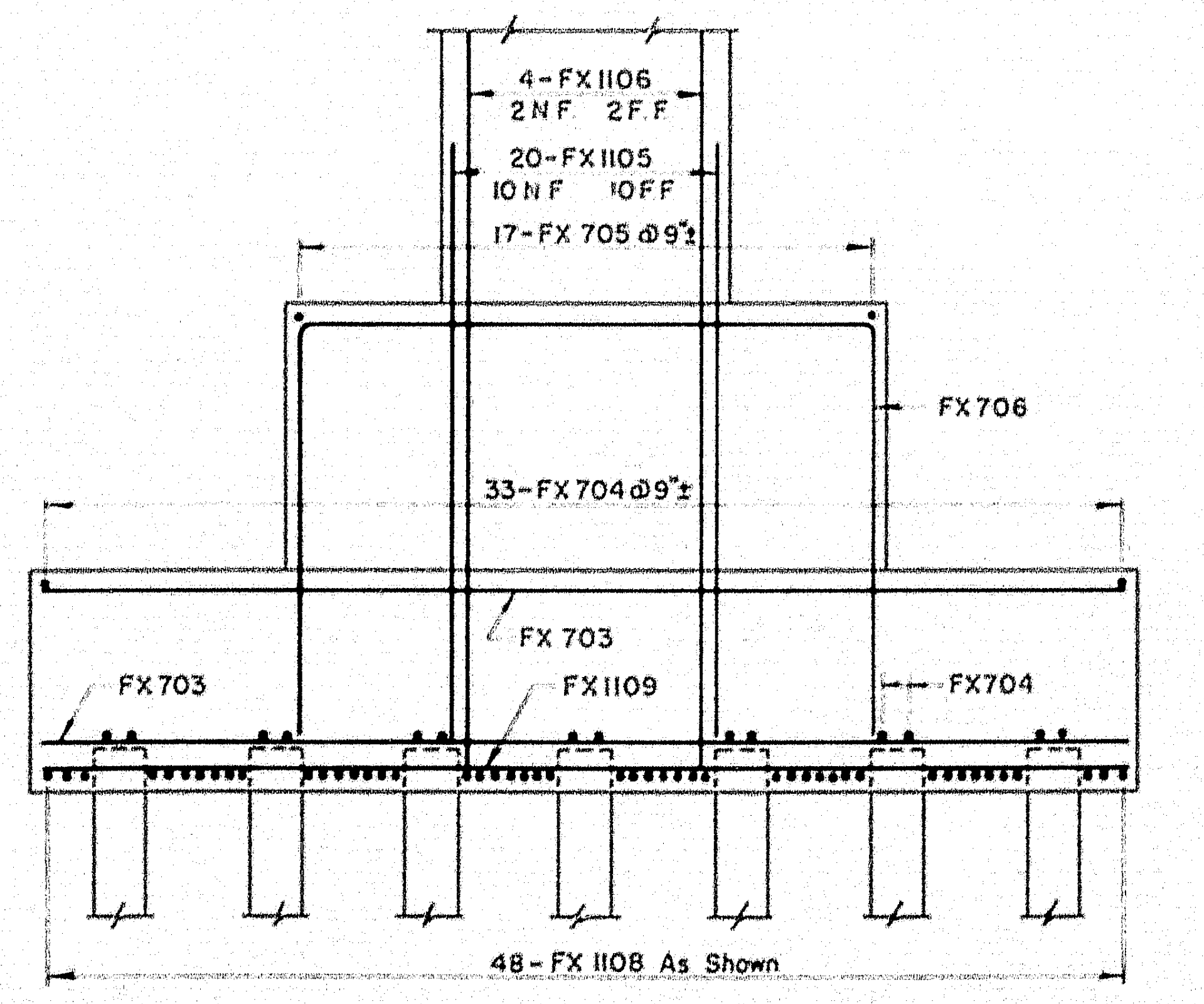
4-FX1106
2NF 2FF
20-FX1105
10NF 10FF
17-FX705 @ 9"±
FX706
33-FX704 @ 9"±
FX703
FX1109
FX703
FX704
48-FX1108 As Shown

SECTION B-B PIERS B,C,M & N

Scale 1/4" = 1'-0"

Notes

1. In bar number, letter "X" to be replaced by Pier letter. Ex. FA, FB etc.
2. Cover in footing and pedestals to be 3".
3. Cover for vertical bars in columns to be 3".
4. See Sheet No. 11 for bar lists.

FOOTING BAR SCHEDULE

PIER	A Bars	B Bars	C Bars	D Bars	E Bars
A,L	17-FX804	21-FX805	6x2-FX707	5x2-FX708	70-FX1103
D,O	17-FX501	23-FX502	—	—	70-FX1104
H	19-FH701	23-FH702	—	—	66-FH1006
J,T	19-FX701	23-FX702	—	—	62-FX1005
E,F,G,P,Q,R	15-FX503	21-FX504	—	—	66-FX1006
K,S,U	15-FX505	19-FX504	—	—	62-FX1004

THE CLARKESON ENG[illegible] INC.

DESIGN C.J.M. CHECK H.P.
DRAWN A.L. APPROVED W.A.H.&C.J.M.

STATE HIGHWAY [illegible]

INTERSTATE #95

OVER

MESSALONSKEE STREAM
& QUARRY ROAD (RELOC.)

IN THE CITY OF

WATERVILLE
KENNEBEC COUNTY
PIER FOOTINGS

SHEET 3 OF 13 SHEETS AUGUSTA, MAINE

78-200

K+E PHOENIX BLUE

0 1 2 3 4 5 INCHES

B.P.R. REG. NO.	STATE	PROJECT NO.	SHEET NO.	TOTAL SHEETS
1	MAINE	I-95-6(23)		

WATERVILLE INTERSTATE

PIER COLUMN REINFORCEMENT

PIER	F Bars	G Bars	H Bars	Group A Bars	Group B Bars	Group C Bars
A	70-CA1107	66-CA1006	62-CA1007	1 Each S534 to S544 2 Each ST534 to ST544 21-SS501	1 Each S514 to S528 2 Each ST514 to ST528 15-SS500	1 Each S505 to S518 2 Each ST505 to ST518 14-SS501
B	70-CB1107	66-CB1006	62-CB1008	1 Each S537 to S557 2 Each ST537 to ST557 21-SS501	1 Each S518 to S532 2 Each ST518 to ST532 15-SS500	1 Each S505 to S521 2 Each ST505 to ST521 17-SS501
C	70-CC1107	66-CC1006	62-CC1013	1 Each S539 to S559 2 Each ST539 to ST559 21-SS501	1 Each S519 to S533 2 Each ST519 to ST533 15-SS500	1 Each S505 to S523 2 Each ST505 to ST523 19-SS501
D	70-CD1107	66 CD1006	62-CD1007	1 Each S533 to S553 2 ST533 to ST553 21-SS501	1 Each S513 to S527 2 ST513 to ST527 15-SS500	1 Each S505 to S517 2 ST505 to ST517 13-SS501
E	62 CE1010	—	—	1 Each S519 to S535 2 ST519 to ST535 17-SS501	1 Each S500 to S513 2 ST500 to ST513 14-SS500	—
F	62-CF1009	—	—	1 Each S516 to SS532 2 ST516 to ST532 17-SS501	1 Each S500 to S509 2 ST500 to ST509 10-SS500	—
G	62-CG1010	—	—	1 Each S519 to S535 2 ST519 to ST535 17-SS501	1 Each S500 to S513 2 ST500 to ST513 14-SS500	—
H	62-CH1012	—	—	1 Each S514 to S530 2 ST514 to ST530 17-SS501	1 Each S500 to S507 2 ST500 to ST507 8-SS500	—
J	62-CJ1013	—	—	1 Each S505 to S524 2 ST505 to ST524 20-SS501	—	—
K	62-CK1002	—	—	1 Each S505 to S512 2 ST505 to ST512 8-SS501	—	—
L	70-CL1107	66-CL1006	62-CL1009	1 Each S532 to S552 2 ST532 to ST552 21-SS501	1 Each S513 to S527 2 ST513 to ST527 15-SS500	1 Each S505 to S516 2 ST505 to ST516 12-SS501
M	70-CM1107	66-CM1006	62-CM1011	1 Each S535 to S555 2 ST535 to ST555 21-SS501	1 Each S516 to S530 2 ST516 to ST530 15-SS500	1 Each S505 to S519 2 ST505 to ST519 15-SS501
N	70-CN1107	66-CN1006	62-CN1010	1 Each S537 to S557 2 ST537 to ST557 21-SS501	1 Each S518 to S532 2 ST518 to ST532 15-SS500	1 Each S505 to S521 2 ST505 to ST521 17-SS501
O	70-CO1107	66-CO1006	62-CO1006	1 Each S530 to S550 2 ST530 to ST550 21-SS501	1 Each S511 to S525 2 ST511 to ST525 15-SS500	1 Each S505 to S514 2 ST505 to ST514 10-SS501
P	62-CP1009	—	—	1 Each S516 to S532 2 ST516 to ST532 17-SS501	1 Each S500 to S509 2 ST500 to ST509 10-SS500	—
Q	62-CQ1009	—	—	1 Each S515 to S531 2 ST515 to ST531 17-SS501	1 Each S500 to S508 2 ST500 to ST508 9-SS500	—
R	62-CR1011	—	—	1 Each S518 to S534 2 ST518 to ST534 17-SS501	1 Each S500 to S512 2 ST500 to ST512 13-SS500	—
S	62-CS1008	—	—	1 Each S505 to S521 2 ST505 to ST521 17-SS501	—	—
T	62-CT1008	—	—	1 Each S505 to S521 2 ST505 to ST521 17-SS501	—	—
U	62-CU1014	—	—	1 Each S505 to S508 2 ST505 to ST508 4-SS501	—	—

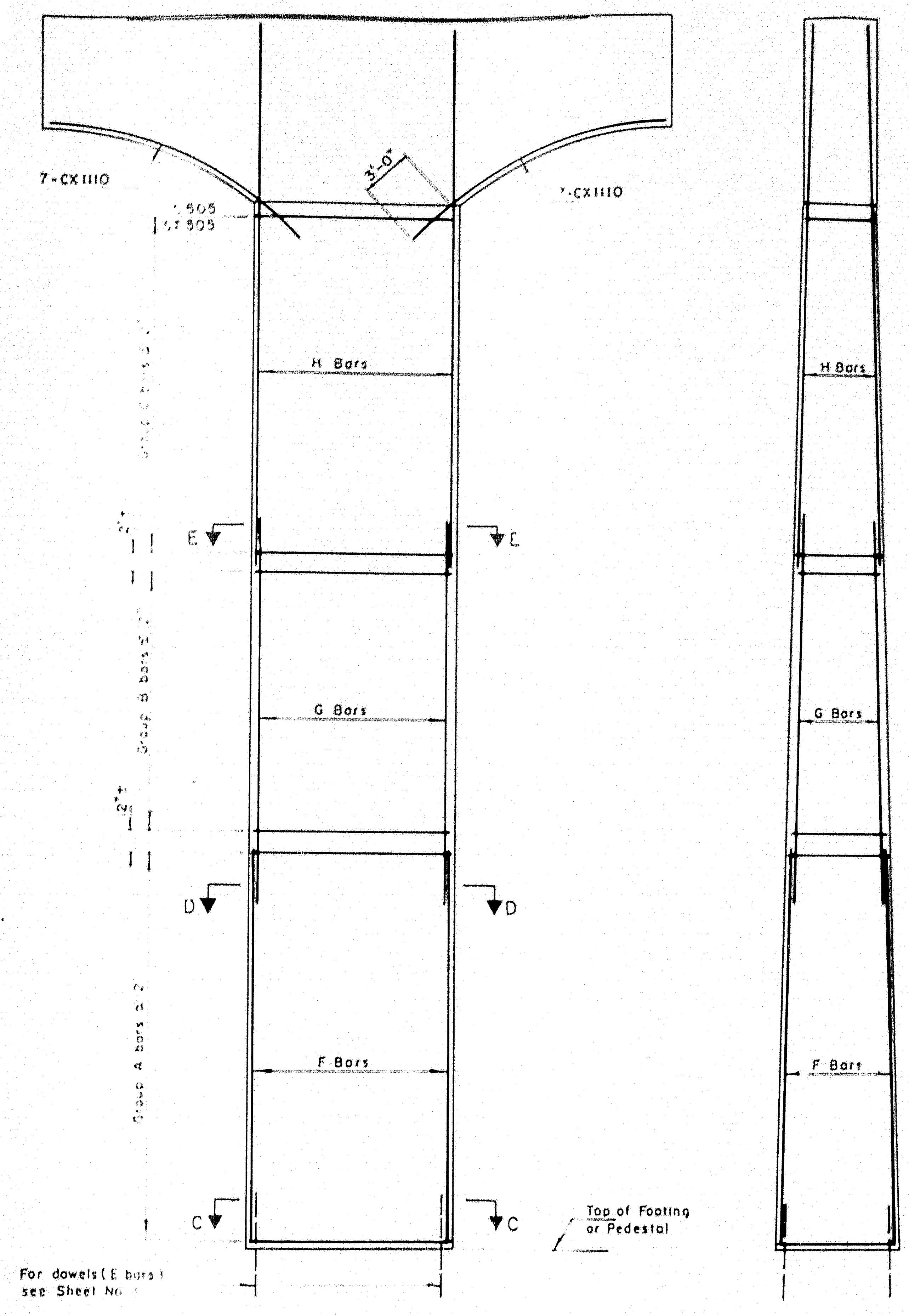
7-CX1110
7-CX1110
S505
ST505
3'-0"
H Bars
H Bars
E
E
G Bars
G Bars
D
D
F Bars
F Bars
C
C
Group B bars
Group A bars
Top of Footing or Pedestal
For dowels (E bars) see Sheet No

PIERS A, B, C, D, J, K, L, M, N, O, S, T, U

Scale 3/16" = 1'-0"

Notes: For Section C-C, see Sheet No 3

Cover for main reinforcing to be 3"

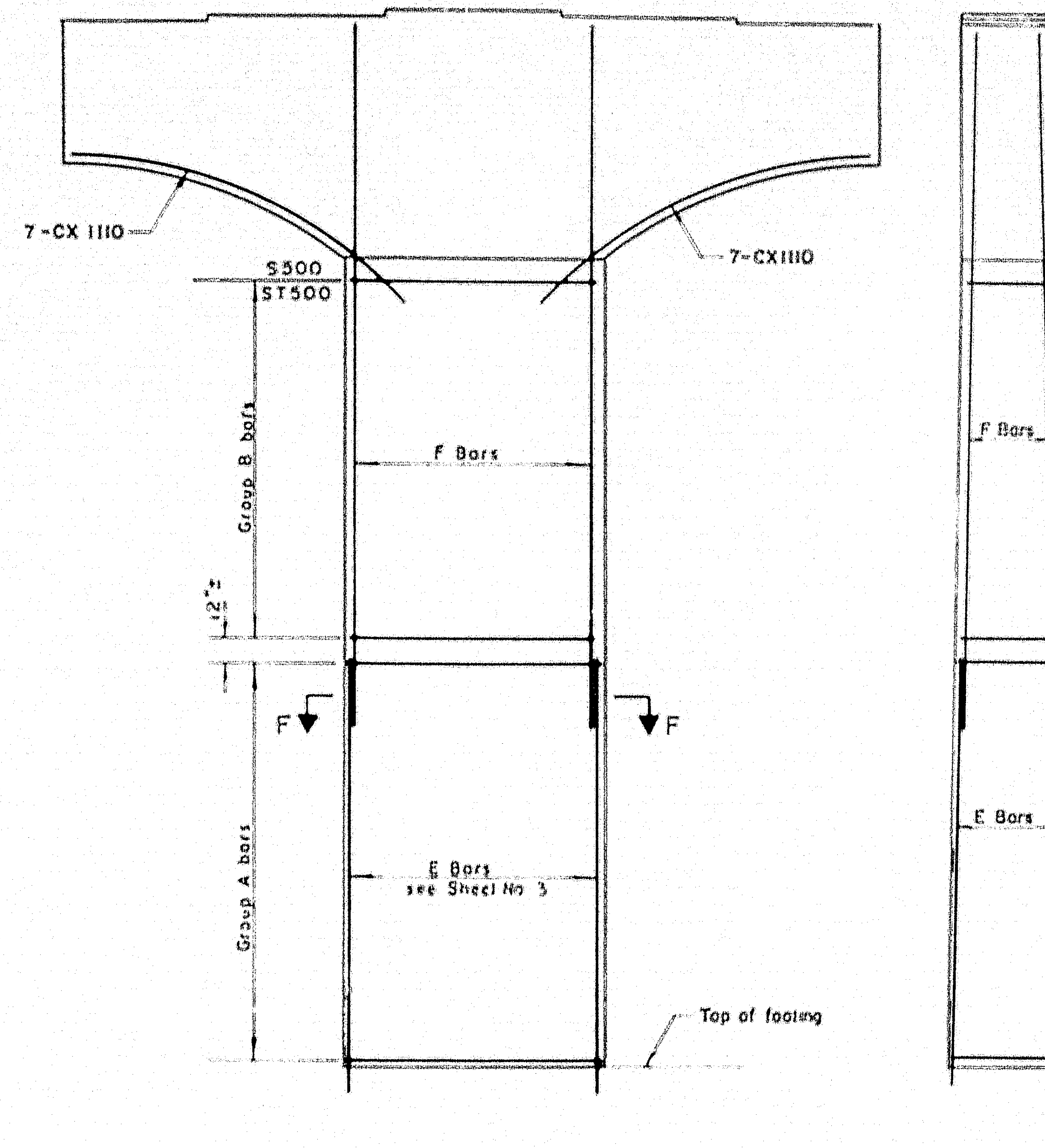
7-CX 1110
7-CX1110
S500
ST500
Group B bars
F Bars
F Bars
12"
F
F
Group A bars
E Bars see Sheet No 3
E Bars
Top of footing

PIERS E, F, G, H, P, Q, R

Scale 3/16" = 1'-0"

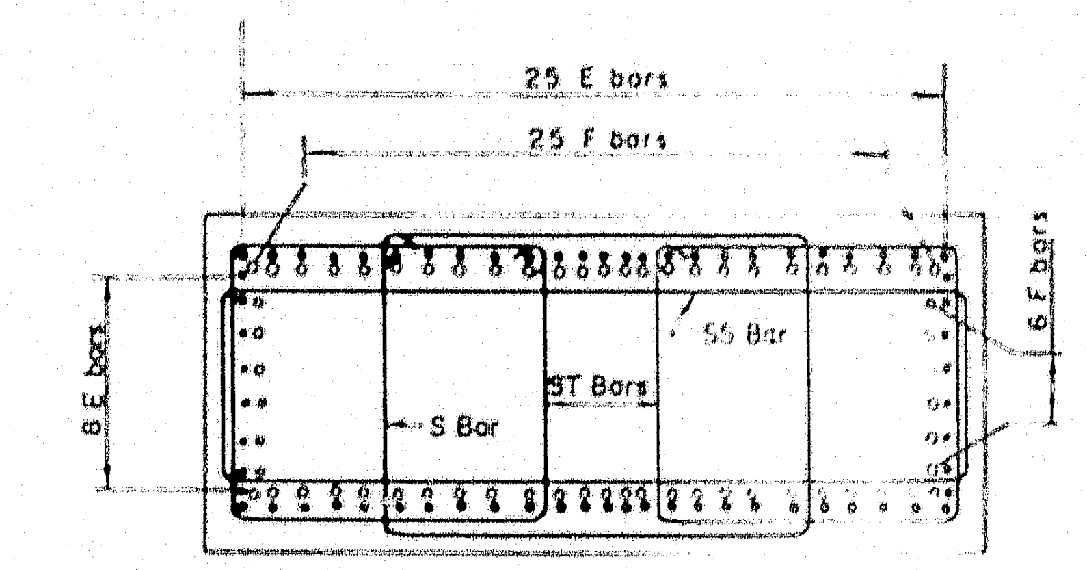
25 E bars
25 F bars
8 E bars
6 F bars
SS Bar
S Bar
ST Bars

SECTION F-F

Scale 3/8"

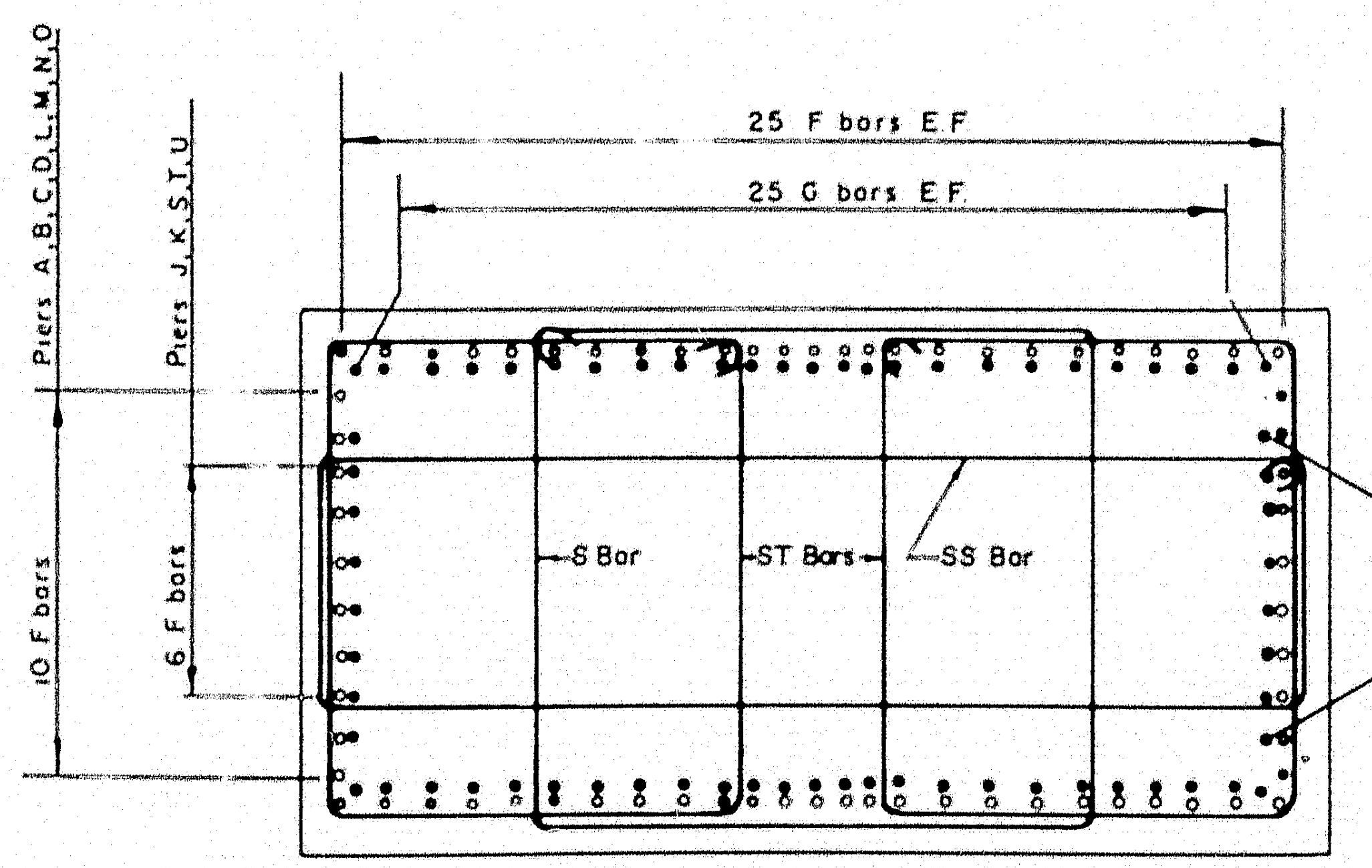
Piers A,B,C,D,L,M,N,O
Piers J,K,S,T,U
25 F bars E.F.
25 G bars E.F.
10 F bars
6 F bars
8 G bars
S Bar
ST Bars
SS Bar

Note: 1-S bar, 1-SS bar, and 2-ST bars to be placed in one layer. Layers to be at 12" ± o.c.

SECTION D-D

Scale: 1/2" = 1'-0"

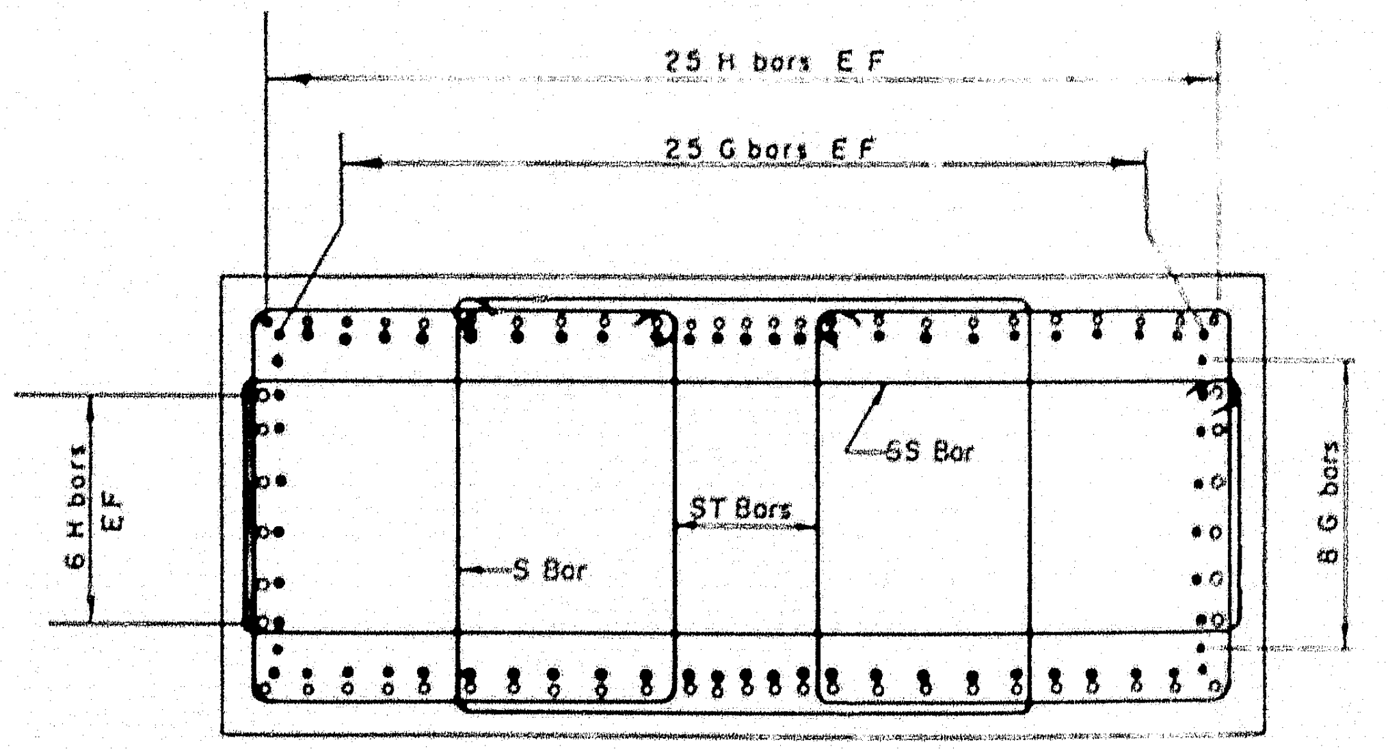
25 H bars E.F.
25 G bars E.F.
6 H bars E.F.
8 G bars
S Bar
ST Bars
SS Bar

SECTION E-E

Scale 1/2" = 1'-0"

THE CLARKESON ENGINEERING CO. INC.

DESIGN C J M	CHECK	BRIDGE NO.
DRAWN D E S	APPROVED	SURVEY

STATE HIGHWAY COMMISSION

INTERSTATE #95

OVER

MESSALONSKEE STREAM

& QUARRY ROAD (RELOC.)

IN THE CITY OF

WATERVILLE

KENNEBEC COUNTY

PIER CAP REINFORCEMENT

SHEET 4 OF 13 SHEETS AUGUSTA, MAINE

78-201

B. P. R. REG. NO.	STATE	PROJECT NO.	SHEET NO.	TOTAL SHEETS
1	MAINE	I-95-6(23)		

WATERVILLE INTERSTATE

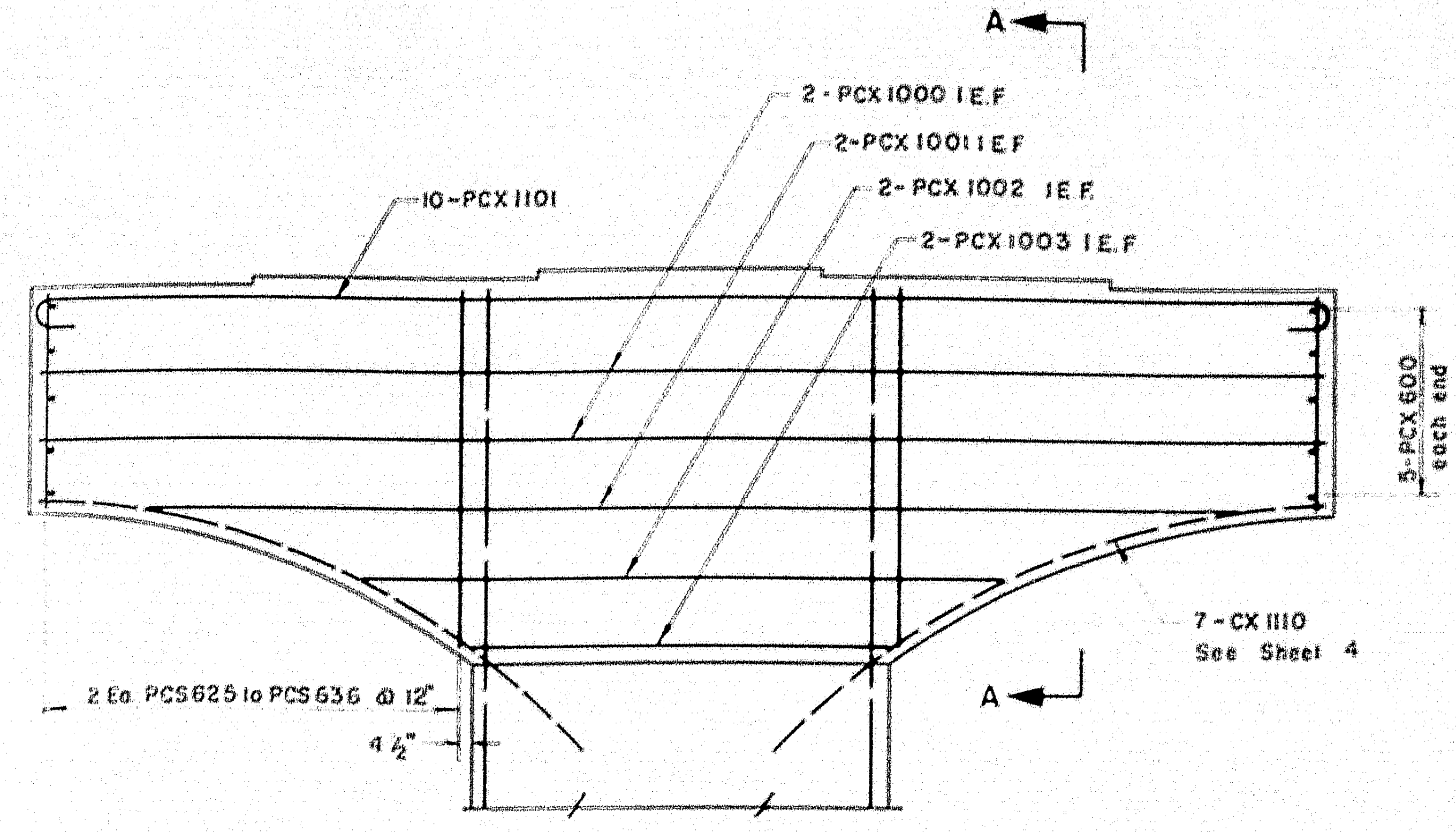
A
10-PCX 1101
2-PCX 1000 I.E.F.
2-PCX 1001 I.E.F.
2-PCX 1002 I.E.F.
2-PCX 1003 I.E.F.
5-PCX 600 each end
7-CX 1110 See Sheet 4
2 Ea. PCS 625 to PCS 636 @ 12"
4½"
A

CAP REINFORCEMENT
PIERS D, E, F, G, H, J, K, O, P, Q, R, S, T & U
Scale ¼" = 1'-0"

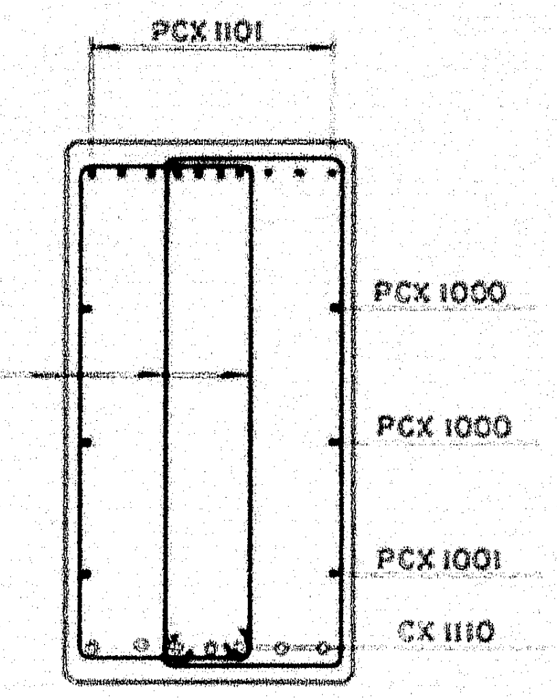
PCX 1101
PCS Bars
PCX 1000
PCX 1000
PCX 1001
CX 1110

SECTION A-A
Scale ⅜" = 1'-0"

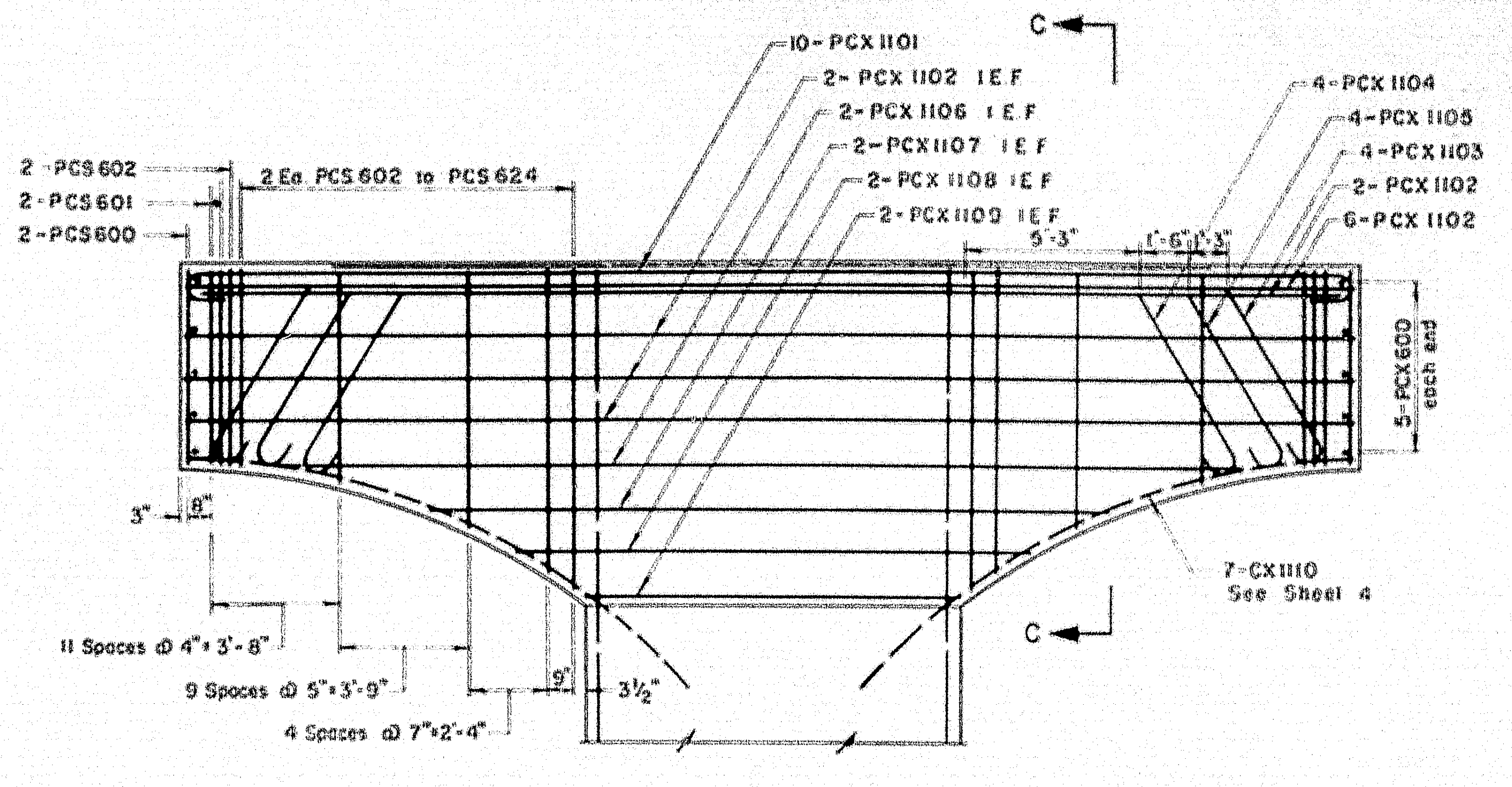
C
10-PCX 1101
2-PCX 1102 I.E.F.
2-PCX 1106 I.E.F.
2-PCX 1107 I.E.F.
2-PCX 1108 I.E.F.
2-PCX 1109 I.E.F.
2-PCS 602
2-PCS 601
2-PCS 600
2 Ea. PCS 602 to PCS 624
4-PCX 1104
4-PCX 1105
4-PCX 1103
2-PCX 1102
6-PCX 1102
5'-3"
1'-6" 1'-3"
5-PCX 600 each end
3"
8"
11 Spaces @ 4" = 3'-8"
9 Spaces @ 5" = 3'-9"
4 Spaces @ 7" = 2'-4"
9"
3½"
7-CX 1110 See Sheet 4
C

CAP REINFORCEMENT
PIERS A, B, L & M
Scale ¼" = 1'-0"

Notes
1 For main reinforcement, "X" in bar number to be replaced by pier letter Ex PCA, PCB, etc
2 For column bars, see Sheet No 4
3 Reinforcing steel symmetrical about ℄ Pier

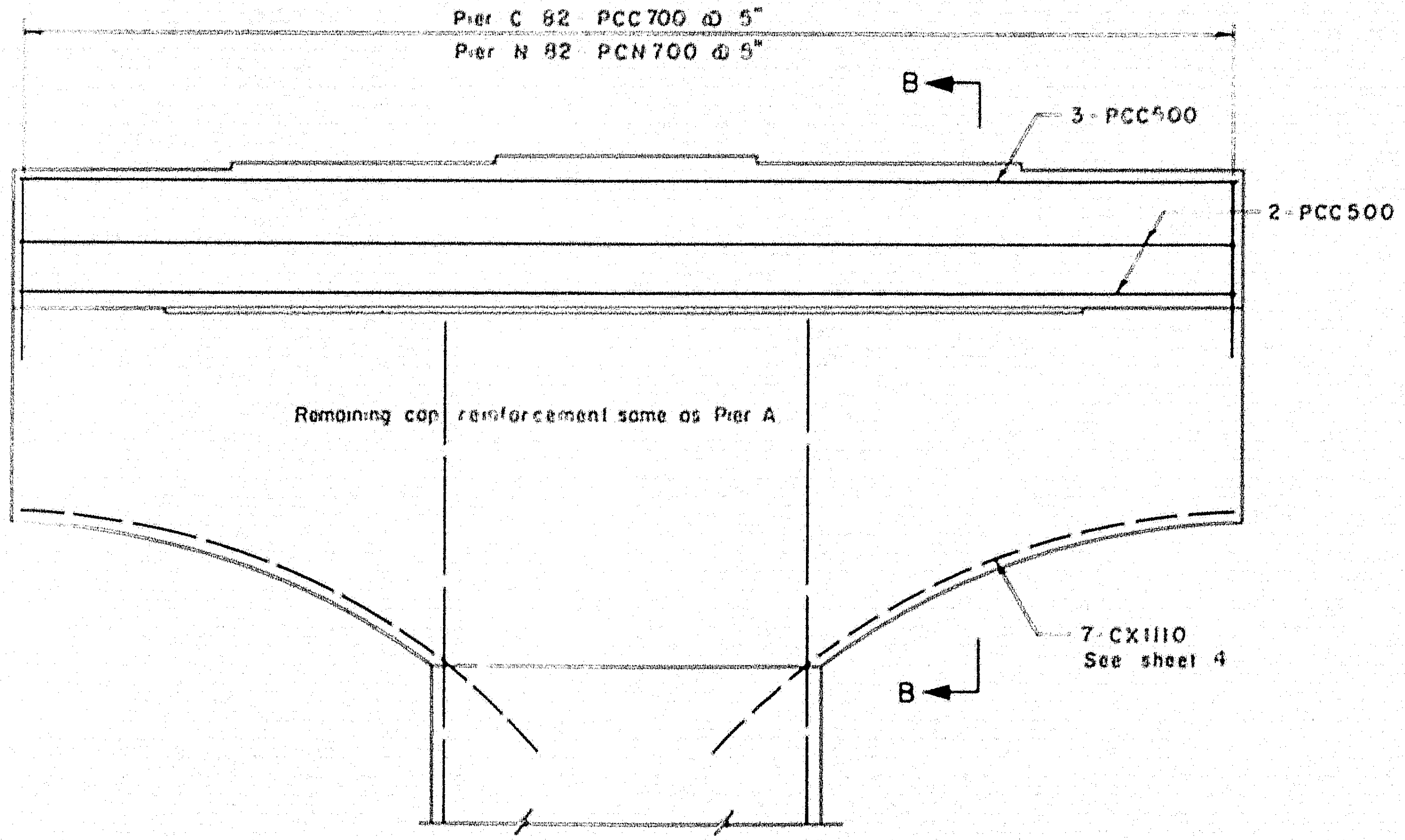
Pier C 82 PCC700 @ 5"
Pier N 82 PCN700 @ 5"
B
3-PCC500
2-PCC500
Remaining cap reinforcement same as Pier A
7-CX 1110 See sheet 4
B

CAP REINFORCEMENT
PIERS C & N
Scale ¼" = 1'-0"

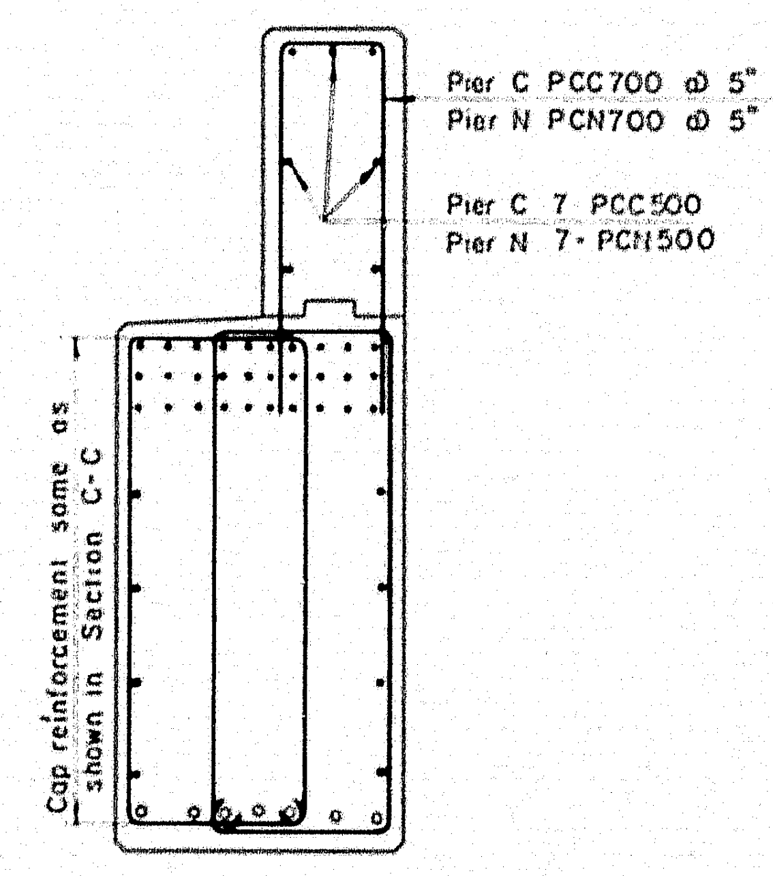
Pier C PCC700 @ 5"
Pier N PCN700 @ 5"
Pier C 7 PCC500
Pier N 7-PCN500
Cap reinforcement same as shown in Section C-C

SECTION B-B
Scale ⅜" = 1'-0"

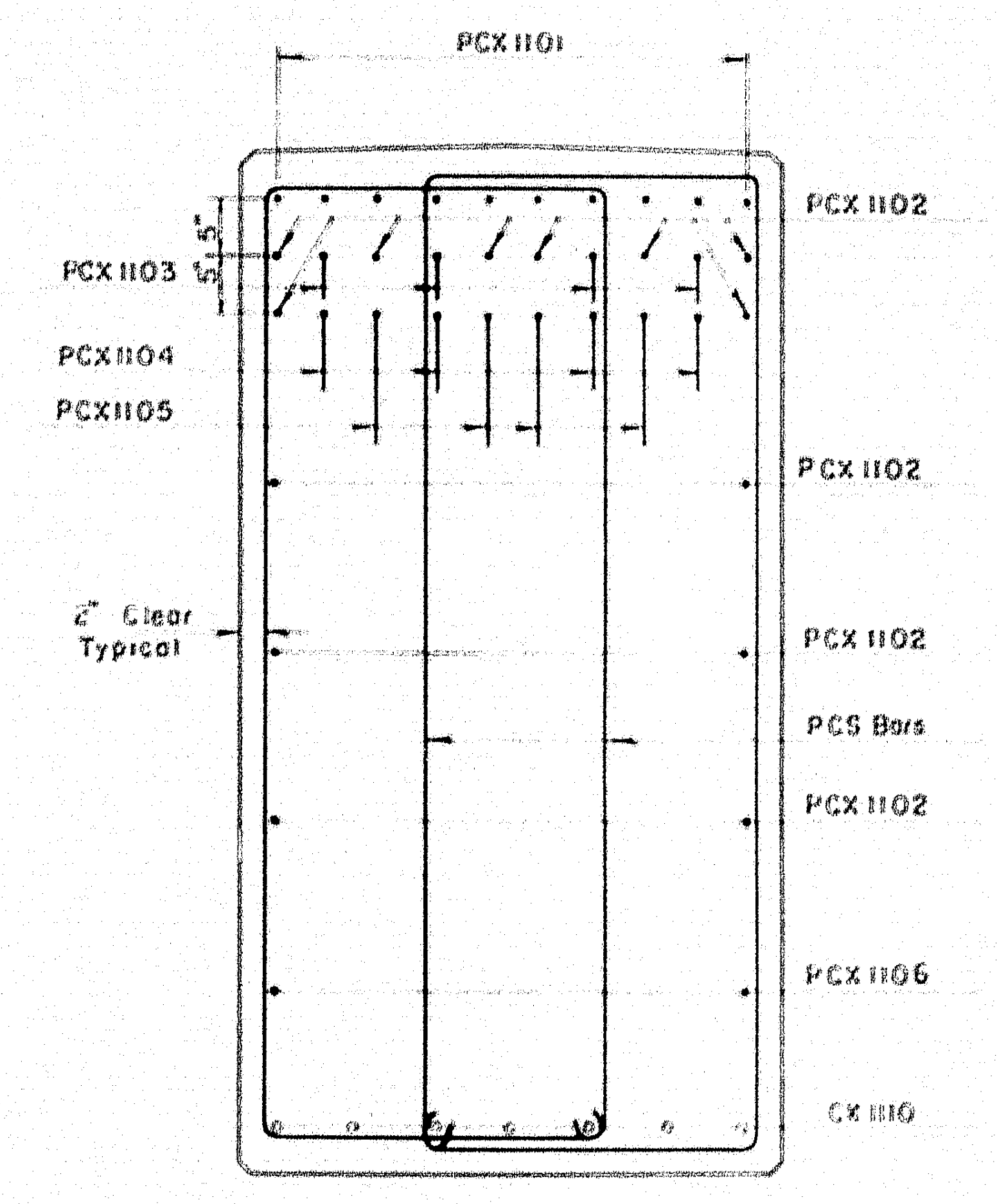
PCX 1101
PCX 1103
5½"
PCX 1104
PCX 1105
2" Clear Typical
PCX 1102
PCX 1102
PCX 1102
PCS Bars
PCX 1102
PCX 1106
CX 1110

SECTION C-C
Scale ¾" = 1'-0"

THE CLARKESON ENGIN[illegible] INC.
DESIGN C J M — CHECK H P
DRAWN A L — APPROVED W.A.H. C.J.M.
STATE HIGHWAY C[illegible]N
INTERSTATE #95
OVER
MESSALONSKEE STREAM
& QUARRY ROAD (RELOC.)
IN THE CITY OF
WATERVILLE
KENNEBEC COUNTY
PIER CAP REINFORCEMENT
SHEET 5 OF 13 SHEETS — AUGUSTA, MAINE

78-202

0 1 2 3 4 5 INCHES

B.P.R. REG. NO.	STATE	PROJECT NO.	SHEET NO.	TOTAL SHEETS
1	MAINE	I-95-6(23)		

WATERVILLE INTERSTATE

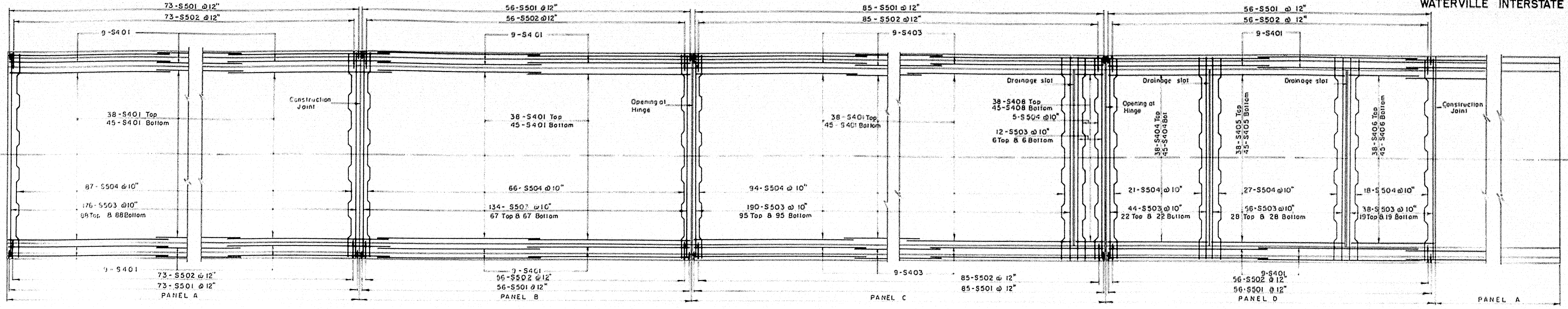
73-S501 @ 12"
73-S502 @ 12"
9-S401
56-S501 @ 12"
56-S502 @ 12"
9-S401
85-S501 @ 12"
85-S502 @ 12"
9-S403
56-S501 @ 12"
56-S502 @ 12"
9-S401
Construction Joint
38-S401 Top
45-S401 Bottom
87-S504 @ 10"
176-S503 @ 10"
88 Top & 88 Bottom
66-S504 @ 10"
134-S503 @ 10"
67 Top & 67 Bottom
Opening at Hinge
38-S401 Top
45-S401 Bottom
94-S504 @ 10"
190-S503 @ 10"
95 Top & 95 Bottom
Drainage slot
38-S408 Top
45-S408 Bottom
5-S504 @ 10"
12-S503 @ 10"
6 Top & 6 Bottom
Opening at Hinge
38-S404 Top
45-S404 Bot.
21-S504 @ 10"
44-S503 @ 10"
22 Top & 22 Bottom
38-S405 Top
45-S405 Bottom
27-S504 @ 10"
56-S503 @ 10"
28 Top & 28 Bottom
38-S406 Top
45-S406 Bottom
18-S504 @ 10"
38-S503 @ 10"
19 Top & 19 Bottom
Construction Joint
9-S401
73-S502 @ 12"
73-S501 @ 12"
PANEL A
9-S401
56-S502 @ 12"
56-S501 @ 12"
PANEL B
9-S403
85-S502 @ 12"
85-S501 @ 12"
PANEL C
9-S401
56-S502 @ 12"
56-S501 @ 12"
PANEL D
PANEL A

GIRDER SPANS 1, 2, & 3

Scale 1/8" = 1'-0"

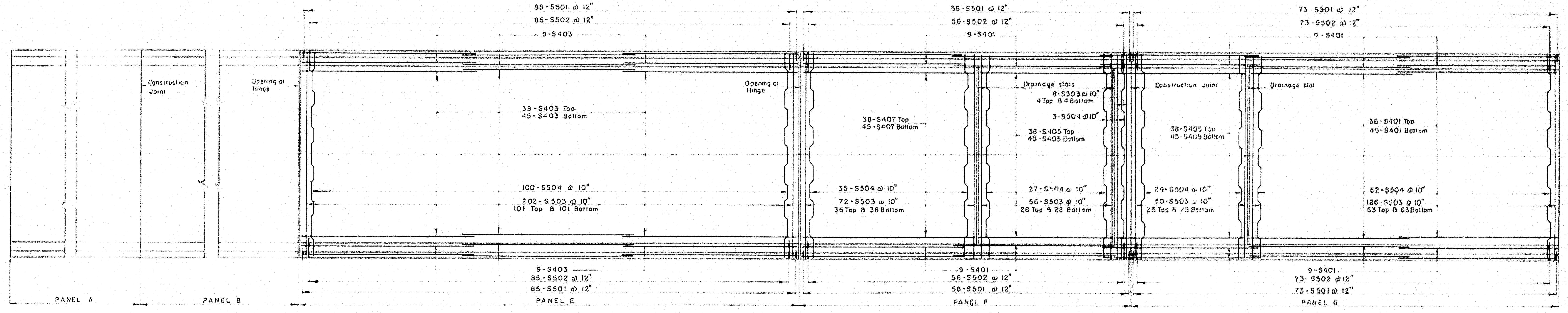
85-S501 @ 12"
85-S502 @ 12"
9-S403
56-S501 @ 12"
56-S502 @ 12"
9-S401
73-S501 @ 12"
73-S502 @ 12"
9-S401
Construction Joint
Opening at Hinge
38-S403 Top
45-S403 Bottom
100-S504 @ 10"
202-S503 @ 10"
101 Top & 101 Bottom
Opening at Hinge
38-S407 Top
45-S407 Bottom
35-S504 @ 10"
72-S503 @ 10"
36 Top & 36 Bottom
Drainage slots
8-S503 @ 10"
4 Top & 4 Bottom
3-S504 @ 10"
38-S405 Top
45-S405 Bottom
27-S504 @ 10"
56-S503 @ 10"
28 Top & 28 Bottom
Construction Joint
38-S405 Top
45-S405 Bottom
24-S504 @ 10"
50-S503 @ 10"
25 Top & 25 Bottom
Drainage slot
38-S401 Top
45-S401 Bottom
62-S504 @ 10"
126-S503 @ 10"
63 Top & 63 Bottom
9-S403
85-S502 @ 12"
85-S501 @ 12"
9-S401
56-S502 @ 12"
56-S501 @ 12"
9-S401
73-S502 @ 12"
73-S501 @ 12"
PANEL A
PANEL B
PANEL E
PANEL F
PANEL G

GIRDER SPANS 12, 13, & 14

Scale 1/8" = 1'-0"

Notes 1 Longitudinal bars lapped 2'-0"±
2 Field cut bars to clear scuppers

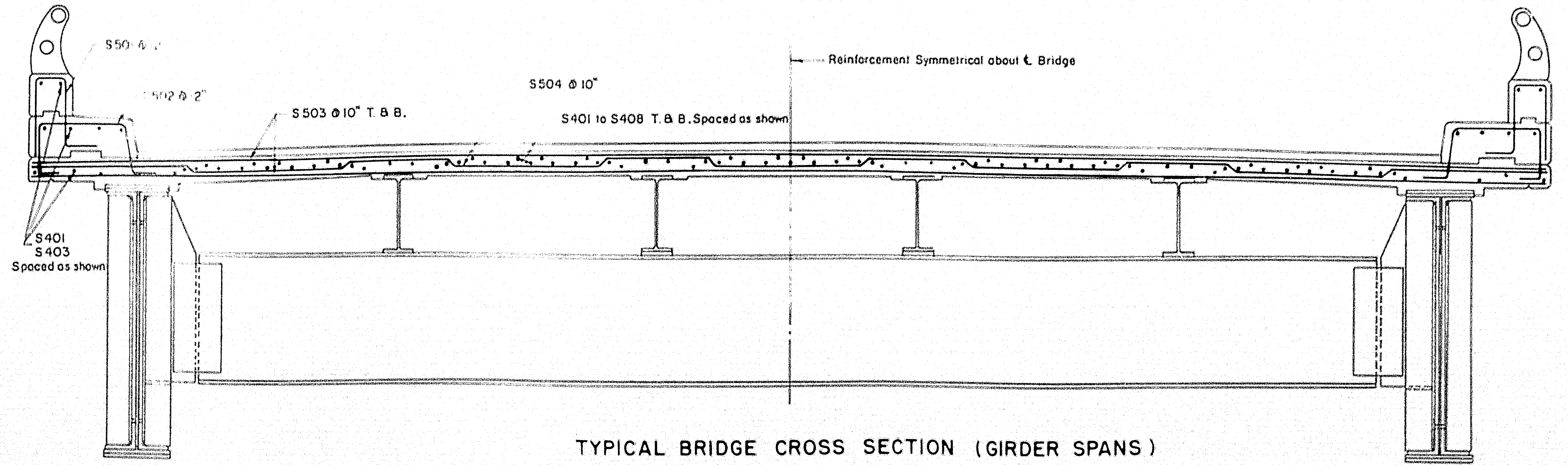
S50 @ 2"
S502 @ 2"
S503 @ 10" T. & B.
S504 @ 10"
S401 to S408 T. & B. Spaced as shown
Reinforcement Symmetrical about ℄ Bridge
S401
S403
Spaced as shown

TYPICAL BRIDGE CROSS SECTION (GIRDER SPANS)

Scale 1/2" = 1'-0"

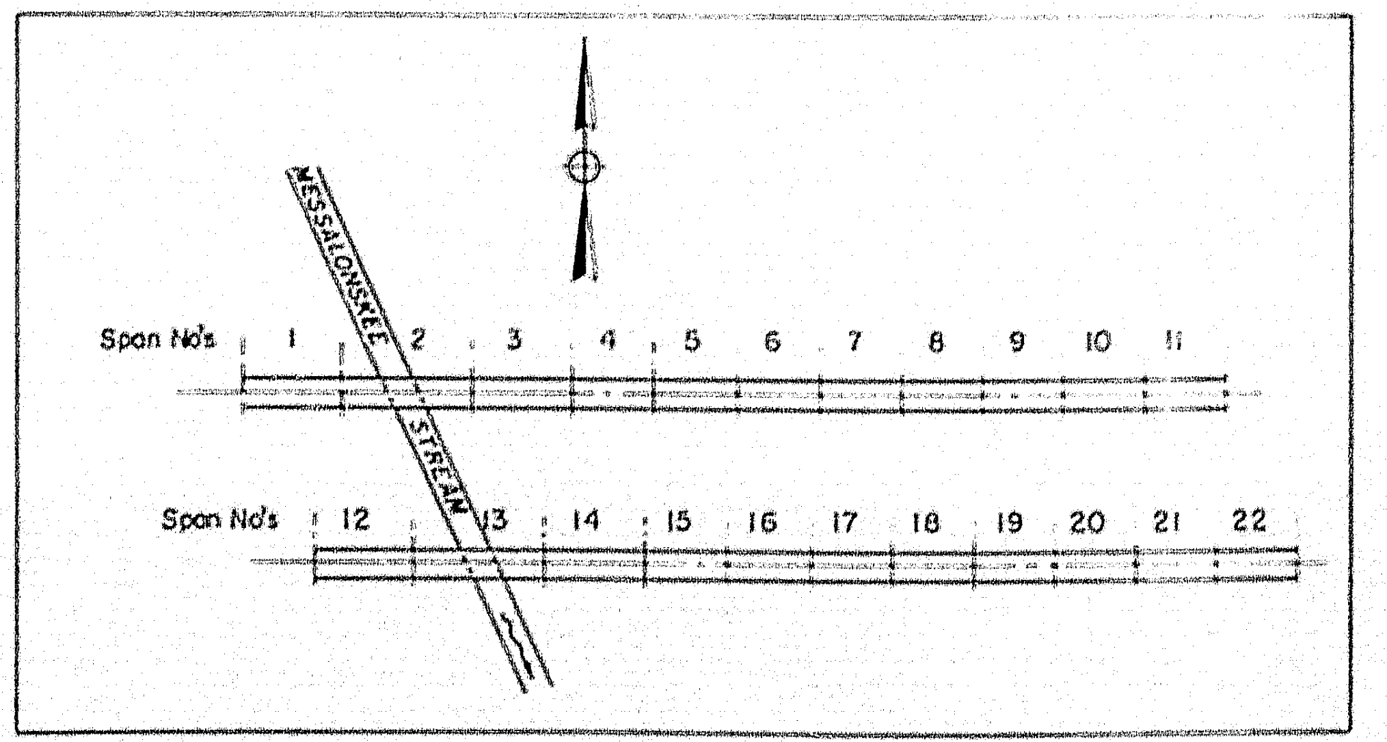
MESSALONSKEE STREAM
Span No's 1 2 3 4 5 6 7 8 9 10 11
Span No's 12 13 14 15 16 17 18 19 20 21 22

KEY PLAN

No Scale

THE CLARKESON ENGINEERING CO., INC.		
DESIGN H L DRAWN D A T	CHECK H P APPROVED W.A.H. C.J.M.	BRIDGE NO. SURVEY PLOT

STATE HIGHWAY COMMISSION
INTERSTATE #95
OVER
MESSALONSKEE STREAM
& QUARRY ROAD (RELOC.)
IN THE CITY OF
WATERVILLE
KENNEBEC COUNTY
DECK SLAB REINFORCEMENT

SHEET 6 OF 13 SHEETS AUGUSTA, MAINE

78-203

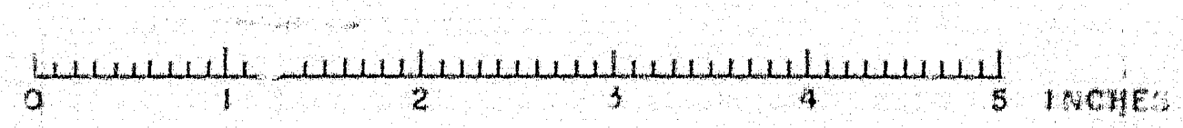
0 1 2 3 4 5 INCHES

B.P.R. REG. NO.	STATE	PROJECT NO.	SHEET NO.	TOTAL SHEETS
1	MAINE	I-95-6(23)		

WATERVILLE INTERSTATE

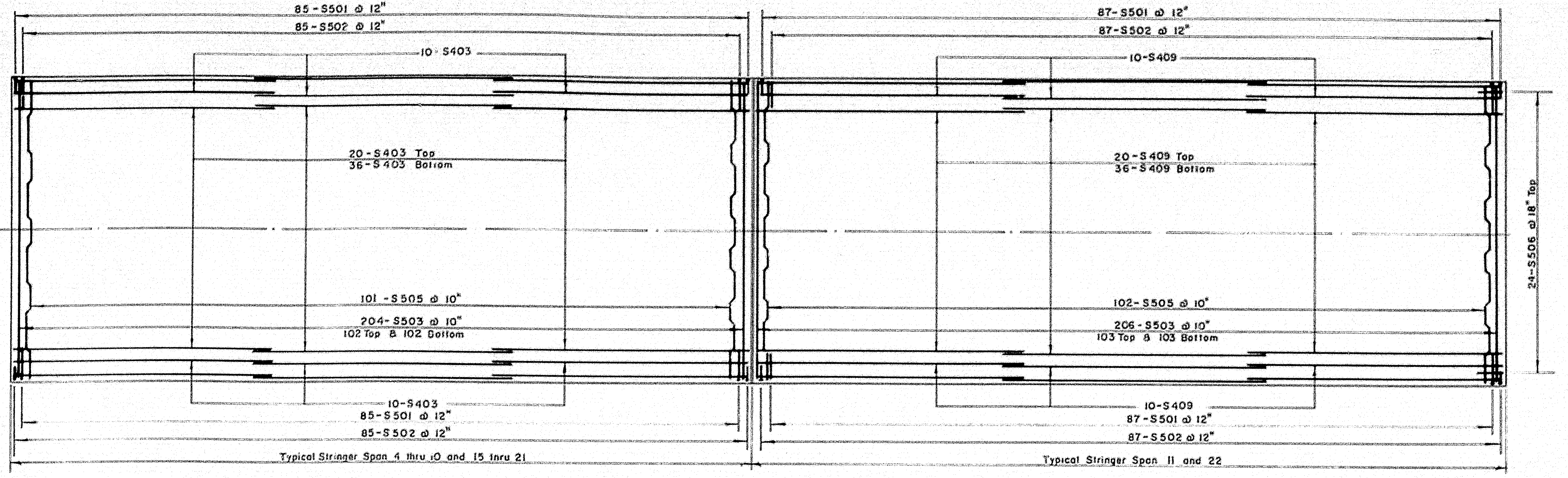
85-S501 @ 12"
85-S502 @ 12"
10-S403
20-S403 Top
36-S403 Bottom
101-S505 @ 10"
204-S503 @ 10"
102 Top & 102 Bottom
10-S403
85-S501 @ 12"
85-S502 @ 12"
Typical Stringer Span 4 thru 10 and 15 thru 21
87-S501 @ 12"
87-S502 @ 12"
10-S409
20-S409 Top
36-S409 Bottom
102-S505 @ 10"
206-S503 @ 10"
103 Top & 103 Bottom
10-S409
87-S501 @ 12"
87-S502 @ 12"
Typical Stringer Span 11 and 22
24-S506 @ 18" Top

STRINGER SPANS

Scale 1/8" = 1'-0"

Notes: 1. Longitudinal bars lapped 2'-0"±
2 Field cut bars to clear scuppers.

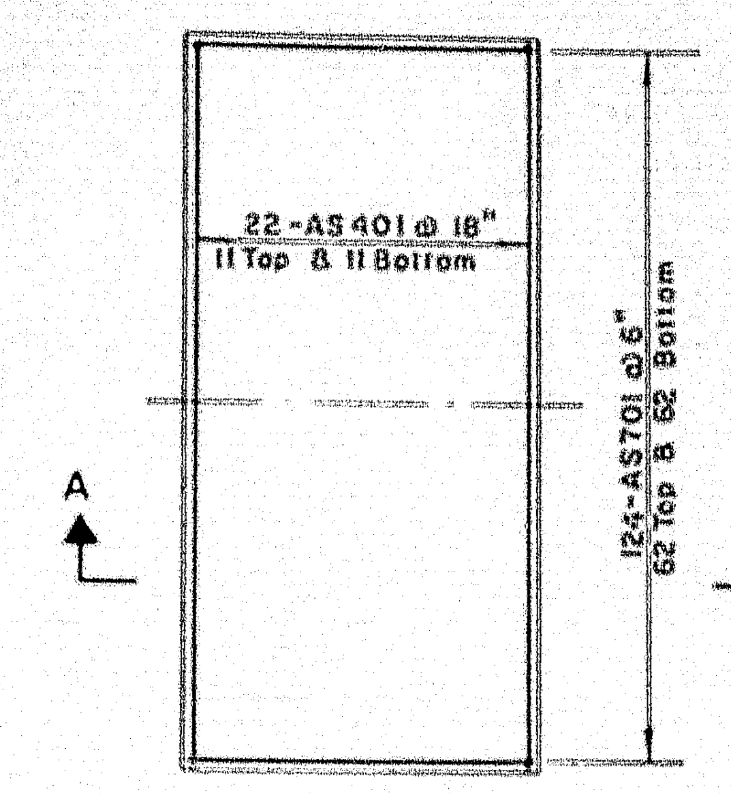
22-AS401 @ 18"
11 Top & 11 Bottom
124-AS701 @ 6"
62 Top & 62 Bottom
A
A

PLAN

Scale 1/8" = 1'-0"

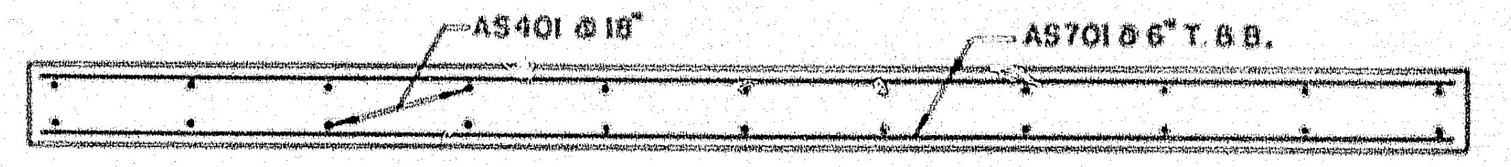
AS401 @ 18"
AS701 @ 6" T. & B.

SECTION A-A

TYPICAL APPROACH SLAB REINFORCEMENT

Scale 1/2" = 1'-0"

Note. 4 approach slabs required.

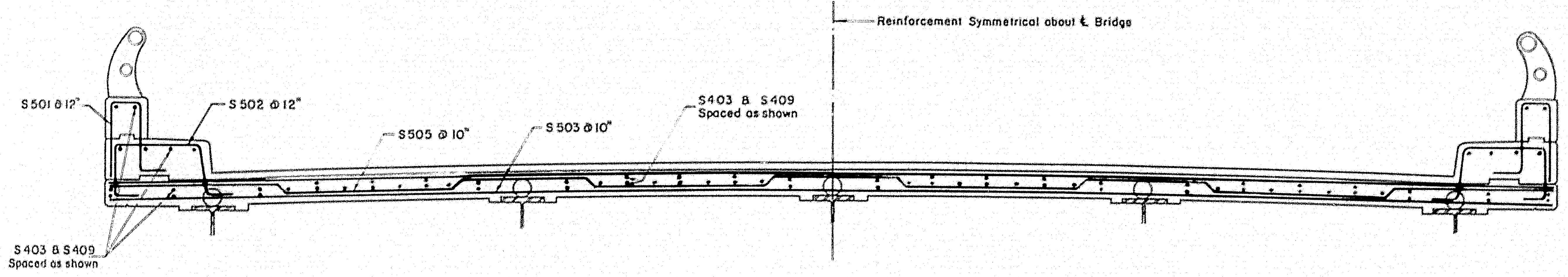
Reinforcement Symmetrical about ℄ Bridge
S501 @ 12"
S502 @ 12"
S505 @ 10"
S503 @ 10"
S403 & S409
Spaced as shown
S403 & S409
Spaced as shown

TYPICAL BRIDGE CROSS SECTION (STRINGER SPANS)

Scale 1/2" = 1'-0"

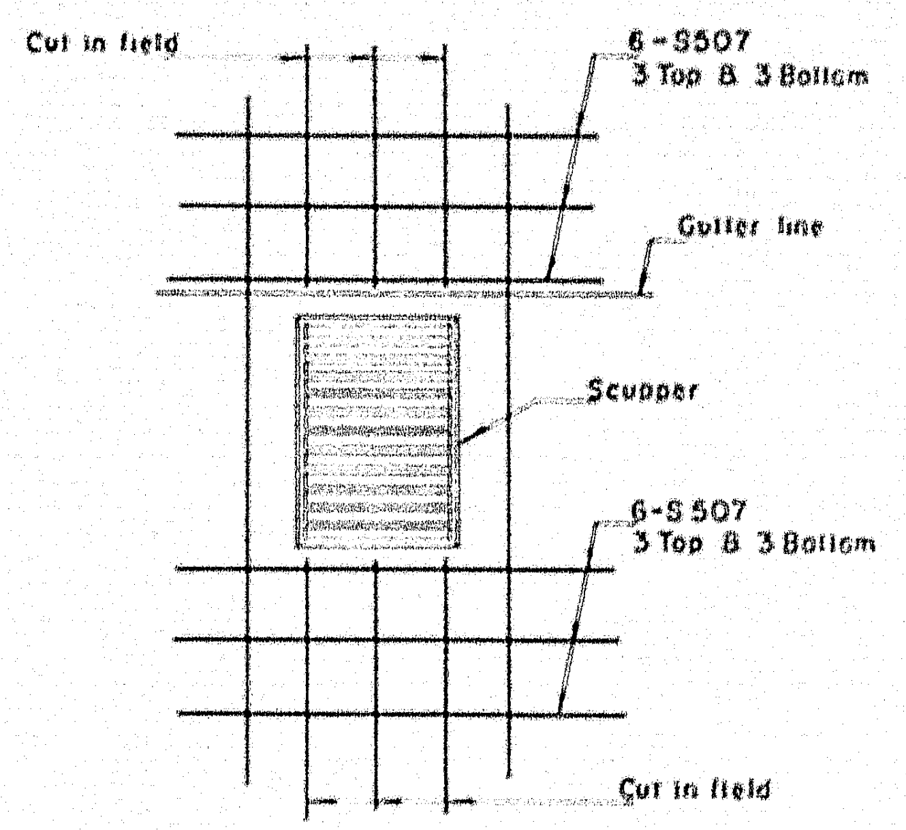
Cut in field
6-S507
3 Top & 3 Bottom
Gutter line
Scupper
6-S507
3 Top & 3 Bottom
Cut in field

PLAN

TYPICAL SCUPPER REINFORCEMENT

Scale 1/2" = 1'-0"

THE CLARKESON ENGI[illegible] INC.

DESIGN H L	CHECK H.P
DRAWN D.E.S.	APPROVED W.A.H.-C.J.M.

STATE HIGHWAY [illegible]
INTERSTATE #95
OVER
MESSALONSKEE STREAM
& QUARRY ROAD (RELOC.)
IN THE CITY OF
WATERVILLE
KENNEBEC COUNTY
DECK & APPROACH SLAB REINFORCEMENT
SHEET 7 OF 13 SHEETS
AUGUSTA, MAINE

78-204

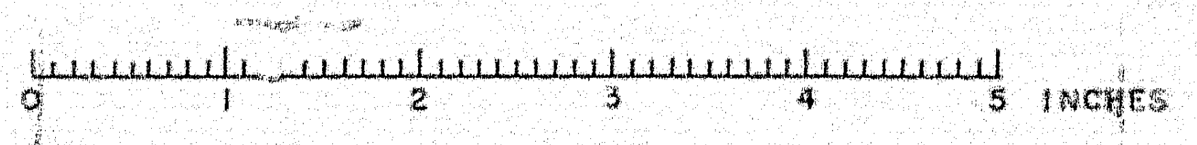
0
1
2
3
4
5
INCHES

B.P.R. REG. NO.	STATE	PROJECT NO.	SHEET NO.	TOTAL SHEETS
1	MAINE	I-95-6(23)		

WATERVILLE INTERSTATE

Item	No Pieces	Size	Length	Mark	Type	A	B	C	D	E	F	G	H	J	K	R	O
			WESTERLY ABUTMENT (SOUTHBOUND)														
1																	
2		FOOTING															
3																	
4	44	5	10'-8"	AW501	Str												
5	21		23'-8"	AW502													
6	32		6'-11"	AW503													
7	21		33'-8"	AW504													
8	10		36'-8"	AW505	Str												
9	36	5	12'-0"	AW506	20		2'-0"	10'-0"									
10																	
11	48	7	5'-3"	AW701	Str												
12	46	7	9'-3"	AW702	Str												
13																	
14	88	8	10'-8"	AW801	Str												
15																	
16																	
17																	
18		ABUTMENT STEM															
19																	
20	24	4	3'-5"	AW401	Str												
21	24	4	34'-8"	AW402	Str												
22																	
23	36	5	8'-0"	AW507	Str												
24	36		9'-5"	AW508	20		1'-2"	8'-3"									
25	36		12'-8"	AW509	17		9'-6"	0'-8"	2'-6"								
26	31		4'-6"	AW510	17		2'-0"	0'-6"	2'-0"								
27	2		34'-8"	AW511	Str												
28	4		5'-11"	AW512	S5	0'-9"	1'-2"	2'-1"	1'-2"			0'-9"					
29	4	5	6'-2"	AW513	S5		2'-9"	0'-8"	2'-0"			0'-9"					
30																	
31	21	6	4'-0"	AW601	17		2'-0"	2'-0"									
32	4	6	34'-8"	AW602	Str												
33																	
34																	
35																	
36		WINGWALLS															
37																	
38	30	5	28'-2"	AW514	Str												
39	78	5	18'-2"	AW515	Str												
40																	
41	48	7	18'-2"	AW703	Str												
42																	
43																	
44																	
45			WESTERLY ABUTMENT (NORTHBOUND)														
46																	
47		FOOTING															
48																	
49	44	5	10'-8"	AW501	Str												
50	21		23'-8"	AW502													
51	32		6'-11"	AW503													
52	21		33'-8"	AW504													
53	10		36'-8"	AW505	Str												
54	36	5	10'-7"	AW516	20		2'-0"	8'-7"									
55																	
56	48	7	5'-3"	AW701	Str												
57	46	7	9'-3"	AW702	Str												
58																	
59	88	8	10'-8"	AW801	Str												
60																	
61																	
62																	
63		ABUTMENT STEM															
64																	
65	24	4	3'-5"	AW401	Str												
66	22	4	34'-8"	AW402	Str												
67																	
68	36	5	9'-5"	AW508	20		1'-2"	8'-3"									
69	36		12'-8"	AW509	17		9'-6"	0'-8"	2'-6"								
70	31		4'-6"	AW510	17		2'-0"	0'-6"	2'-0"								
71	2		34'-8"	AW511	Str												
72	4		5'-11"	AW512	S5	0'-9"	1'-2"	2'-1"	1'-2"			0'-9"					
73	4		6'-2"	AW513	S5		2'-9"	0'-8"	2'-0"			0'-9"					
74	36	5	6'-7"	AW517	Str												
75																	
76	21	6	4'-0"	AW601	17		2'-0"	2'-0"									
77	4	6	34'-8"	AW602	Str												
78																	
79																	
80																	
81																	
82																	
83		WINGWALLS															
84																	
85	28	5	28'-2"	AW514	Str												
86	28	5	18'-2"	AW515	Str												
87	48	5	16'-8"	AW518	Str												
88																	
89	48	7	16'-8"	AW704	Str												
90																	
91																	
92																	
93			DECK														
94																	
95	1,854	4	27'-4"	S401	Str												
96	3,549		25'-3"	S403													
97	83		17'-3"	S404													
98	249		22'-4"	S405													
99	83		12'-0"	S406													
100	83		29'-2"	S407													
101	83		4'-9"	S408													
102	456	4	29'-9"	S409	Str												
103																	
104	4,100	5	4'-7"	S501	S5		1'-9"	0'-8"	1'-5"			0'-9"					
105	4,100		5'-11"	S502	S5	0'-9"	1'-2"	2'-1"	1'-2"			0'-9"					
106	4,918		34'-8"	S503	Str												
107	809		35'-11"	S504	15		3'-4"	0'-5½"	3'-4"	2'-0"							34'-8"
108	1,618		36'-0"	S505	15		3'-8½"	0'-6½"	4'-0"	2'-9"							34'-8"
109	48		3'-0"	S506	Str												
110	432	5	6'-0"	S507	Str												
111																	
112																	
113																	
114			APPROACH SLABS														
115																	
116	88	4	30'-8"	AS401	Str												
117																	
118	496	7	14'-8"	AS701	Str												
119																	
120																	
121																	
122																	
123																	
124																	
125																	
126																	
127																	
128																	
129																	
130																	
131																	
132																	
133																	
134																	
135																	
136																	
137																	
138																	
139																	
140																	
140																	
141																	
142																	
143																	
144																	
145																	
146																	
147																	
148																	
149																	
150																	
151																	
152																	
153																	
154																	
155																	
156																	
157																	
158																	
159																	
160																	
161																	
162																	
163																	
164																	
165																	
166																	
167																	
168																	
169																	
170																	
171																	
172																	
173																	
174																	
175																	
176																	
177																	
178																	
179																	
180																	
181																	
182																	
183																	
184																	
185																	
186																	
187																	
188																	
189																	
190																	

TYPICAL BAR BENDS

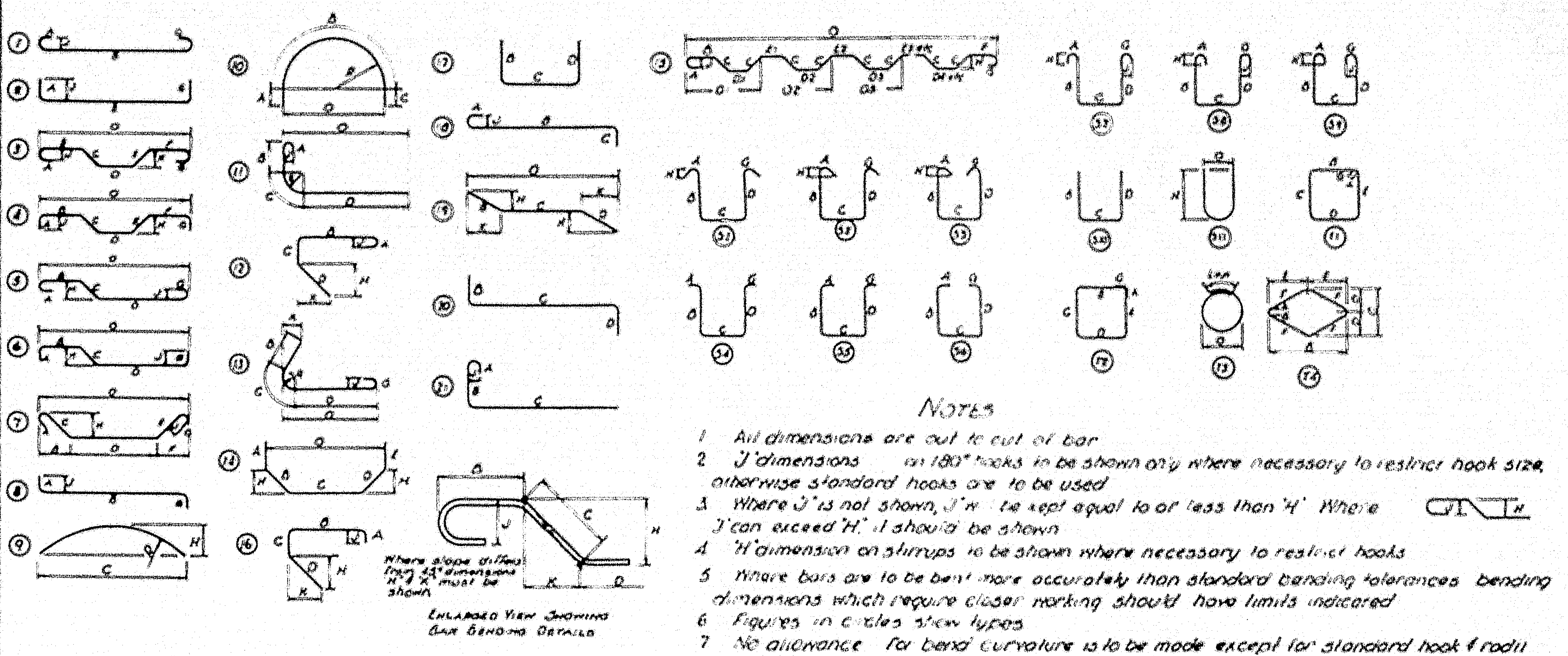
Where slope differs from 45° dimensions H & K must be shown
ENLARGED VIEW SHOWING BAR BENDING DETAILS

NOTES

1 All dimensions are out to out of bar
2 'J' dimensions on 180° hooks to be shown only where necessary to restrict hook size, otherwise standard hooks are to be used
3 Where 'J' is not shown, 'J' will be kept equal to or less than 'H'. Where 'J' can exceed 'H', it should be shown
4 'H' dimension on stirrups to be shown where necessary to restrict hooks
5 Where bars are to be bent more accurately than standard bending tolerances, bending dimensions which require closer working should have limits indicated
6 Figures in circles show types
7 No allowance for bend curvature is to be made except for standard hook & radii in excess of same
8 Bar reinforcement metal shall conform to the requirements of the Standard Specifications for new Billet-Steel Concrete Reinforcement Bars (Intermediate Grade) Serial Designation A.A.S.H.O. M31-48 or its latest revision. All bars shall be deformed to conform with A.S.T.M. Specifications A305-49.

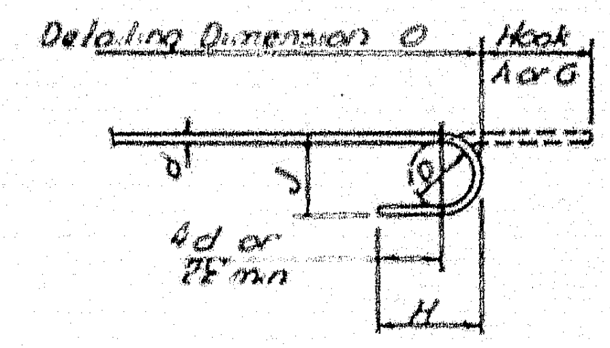

STANDARD HOOK DETAIL

BAR SIZES

Equivalent Size	Present (Numbers)
¼"φ	#2
⅜"φ	#3
½"φ	#4
⅝"φ	#5
¾"φ	#6
⅞"φ	#7
1"φ	#8
1"□	#9
1⅛"□	#10
1¼"□	#11

WESTERLY ABUTMENT (SOUTHBOUND)
Footing... 6695 #
Stem ... 2343 #
Wings ... 4136 #
13,174 #

WESTERLY ABUTMENT (NORTHBOUND)
Footing. 6641 #
Stem 2243 #
Wings 3819 #
12,703 #

DECK 436,118 #
APPROACH SLABS 16,675 #

THE CLARKESON ENGINEERING CO., INC.

DESIGN H.L. | CHECK H.P. | BRIDGE NO. SURVEY PLOT
DRAWN F.E.T. | APPROVED WAH-C.JM

STATE HIGHWAY COMMISSION
INTERSTATE #95
OVER
MESSALONSKEE STREAM
& QUARRY ROAD (RELOC.)
IN THE CITY OF
WATERVILLE
KENNEBEC COUNTY
REINFORCEMENT SCHEDULE
SHEET 8 OF 13 SHEETS
AUGUSTA, MAINE

78-205

0 1 2 3 4 5 INCHES

B.P.R. REG. NO.	STATE	PROJECT NO.	SHEET NO.	TOTAL SHEETS
1	MAINE	I-95-6(23)		

WATERVILLE INTERSTATE

Item	No Pieces	Size	Length	Mark	Type	A	B	C	D	E	F	G	H	J	K	R	O
		NORTHEASTERLY ABUTMENT															
1																	
2		FOOTING															
3																	
4	91	5	5'-8"	ANE 501	Str												
5	1		3'-5"	ANE 502													
6	1		3'-7"	ANE 503													
7	1		3'-8"	ANE 504													
8	1		3'-10"	ANE 505													
9	1		4'-0"	ANE 506													
10	1		4'-2"	ANE 507													
11	1		4'-4"	ANE 508													
12	1		4'-5"	ANE 509													
13	1		4'-7"	ANE 510													
14	1		4'-9"	ANE 511													
15	1		4'-11"	ANE 512													
16	1		5'-1"	ANE 513													
17	1		5'-2"	ANE 514													
18	1		5'-4"	ANE 515													
19	1		5'-6"	ANE 516													
20	20		19'-6"	ANE 517													
21	7		17'-0"	ANE 518													
22	7		11'-6"	ANE 519													
23	7		10'-6"	ANE 520													
24	8		4'-0"	ANE 521	Str												
25	35	5	8'-0"	ANE 522	20		2'-0"	6'-0"									
26																	
27	3	6	11'-6"	ANE 601	20		4'-6"	7'-0"									
28																	
29	2	6	12'-0"	ANE 602	20		4'-6"	7'-6"									
30	1		6'-9"	ANE 603			2'-3"	4'-6"									
31	1		6'-11"	ANE 604			2'-5"										
32	1		7'-0"	ANE 605			2'-6"										
33	1		7'-2"	ANE 606			2'-8"										
34	1		7'-4"	ANE 607			2'-10"										
35	1		7'-6"	ANE 608			3'-0"										
36	1		7'-8"	ANE 609			3'-2"										
37	1		7'-10"	ANE 610			3'-4"										
38	1		7'-11"	ANE 611			3'-5"										
39	1		8'-1"	ANE 612			3'-7"										
40	1		8'-3"	ANE 613			3'-9"										
41	1		8'-5"	ANE 614			3'-11"										
42	1		8'-6"	ANE 615			4'-0"										
43	1		8'-8"	ANE 616			4'-2"										
44	1		8'-10"	ANE 617			4'-4"										
45	17	6	9'-0"	ANE 618	20		4'-4"	4'-6"									
46																	
47																	
48		STEM															
49																	
50	24	4	3'-2"	ANE 401	Str												
51	10	4	34'-8"	ANE 402	Str												
52																	
53	35	5	4'-11"	ANE 523	20		0'-11"	4'-0"									
54	35	5	8'-5"	ANE 524	17		5'-4"	0'-6"	2'-7"								
55	32	5	4'-0"	ANE 525	Str												
56																	
57	4	6	34'-8"	ANE 619	Str												
58	21	6	4'-0"	ANE 620	17		2'-0"	2'-0"									
59																	
60																	
61																	
62		NORTHERLY WING															
63																	
64	8	4	15'-3"	ANE 403	Str												
65	2		14'-6"	ANE 404													
66	2		12'-5"	ANE 405													
67	2		10'-4"	ANE 406													
68	2		8'-2"	ANE 407													
69	2		6'-0"	ANE 408													
70	2		3'-10"	ANE 409													
71	2	4	1'-4"	ANE 410	Str												
72																	
73	1	5	2'-11"	ANE 526	Str												
74	1		3'-5"	ANE 527													
75	1		3'-11"	ANE 528													
76	1		4'-4"	ANE 529													
77	1		4'-10"	ANE 530													
78	1		5'-4"	ANE 531													
79	1		5'-9"	ANE 532													
80	1	5	6'-3"	ANE 533	Str.												
81																	

Item	No Pieces	Size	Length	Mark	Type	A	B	C	D	E	F	G	H	J	K	R	O
82																	
83	1	5	6'-8"	ANE 534	Str												
84	1		7'-2"	ANE 535													
85	1		7'-8"	ANE 536													
86	1		8'-2"	ANE 537													
87	1		8'-8"	ANE 538													
88	1		9'-1"	ANE 539													
89	2	5	9'-5"	ANE 540	Str												
90																	
91	1	6	2'-11"	ANE 621	Str												
92	1		3'-5"	ANE 622													
93	1		3'-11"	ANE 623													
94	1		4'-4"	ANE 624													
95	1		4'-10"	ANE 625													
96	1		5'-4"	ANE 626													
97	1		5'-9"	ANE 627													
98	1		6'-3"	ANE 628													
99	1		6'-8"	ANE 629													
100	1		7'-2"	ANE 630													
101	1		7'-8"	ANE 631													
102	1		8'-2"	ANE 632													
103	1		8'-8"	ANE 633													
104	1		9'-1"	ANE 634													
105	2	6	9'-5"	ANE 635	Str												
106																	
107																	
108		SOUTHERLY WING															
109																	
110	6	4	8'-3"	ANE 411	Str												
111	4		17'-9"	ANE 412													
112	2		20'-2"	ANE 413													
113	2		18'-2"	ANE 414													
114	2		16'-1"	ANE 415													
115	2		14'-0"	ANE 416													
116	2		11'-10"	ANE 417													
117	2		9'-9"	ANE 418													
118	2		7'-8"	ANE 419													
119	2		5'-8"	ANE 420													
120	2		3'-5"	ANE 421													
121	2		1'-5"	ANE 422													
122	2	4	20'-8"	ANE 423	Str												
123																	
124	2	5	9'-5"	ANE 541	Str												
125	1		9'-1"	ANE 542													
126	1		11'-0"	ANE 543													
127	1		10'-7"	ANE 544													
128	1		10'-1"	ANE 545													
129	1		9'-8"	ANE 546													
130	1		9'-2"	ANE 547													
131	1		8'-8"	ANE 548													
132	1		8'-2"	ANE 549													
133	1		7'-8"	ANE 550													
134	1		7'-2"	ANE 551													
135	1		9'-9"	ANE 552													
136	1		9'-3"	ANE 553													
137	1		8'-9"	ANE 554													
138	1		8'-3"	ANE 555													
139	1		7'-9"	ANE 556													
140	1		7'-4"	ANE 557													
140	1		6'-10"	ANE 558													
141	1		6'-4"	ANE 559													
142	1	5	5'-10"	ANE 560	Str.												
143																	
144	2	6	9'-5"	ANE 636	Str												
145	1		9'-1"	ANE 637													
146	1		11'-0"	ANE 638													
147	1		10'-7"	ANE 639													
148	1		10'-1"	ANE 640													
149	1		9'-8"	ANE 641													
150	1		9'-2"	ANE 642													
151	1		8'-8"	ANE 643													
152	1		8'-2"	ANE 644													
153	1		7'-8"	ANE 645													
154	1		7'-2"	ANE 646													
155	1		9'-9"	ANE 647													
156	1		9'-3"	ANE 648													
157	1		8'-9"	ANE 649													
158	1		8'-3"	ANE 650													
159	1		7'-9"	ANE 651													
160	1		7'-4"	ANE 652													
161	1	6	6'-10"	ANE 653	Str												
162																	

TYPICAL BAR BENDS

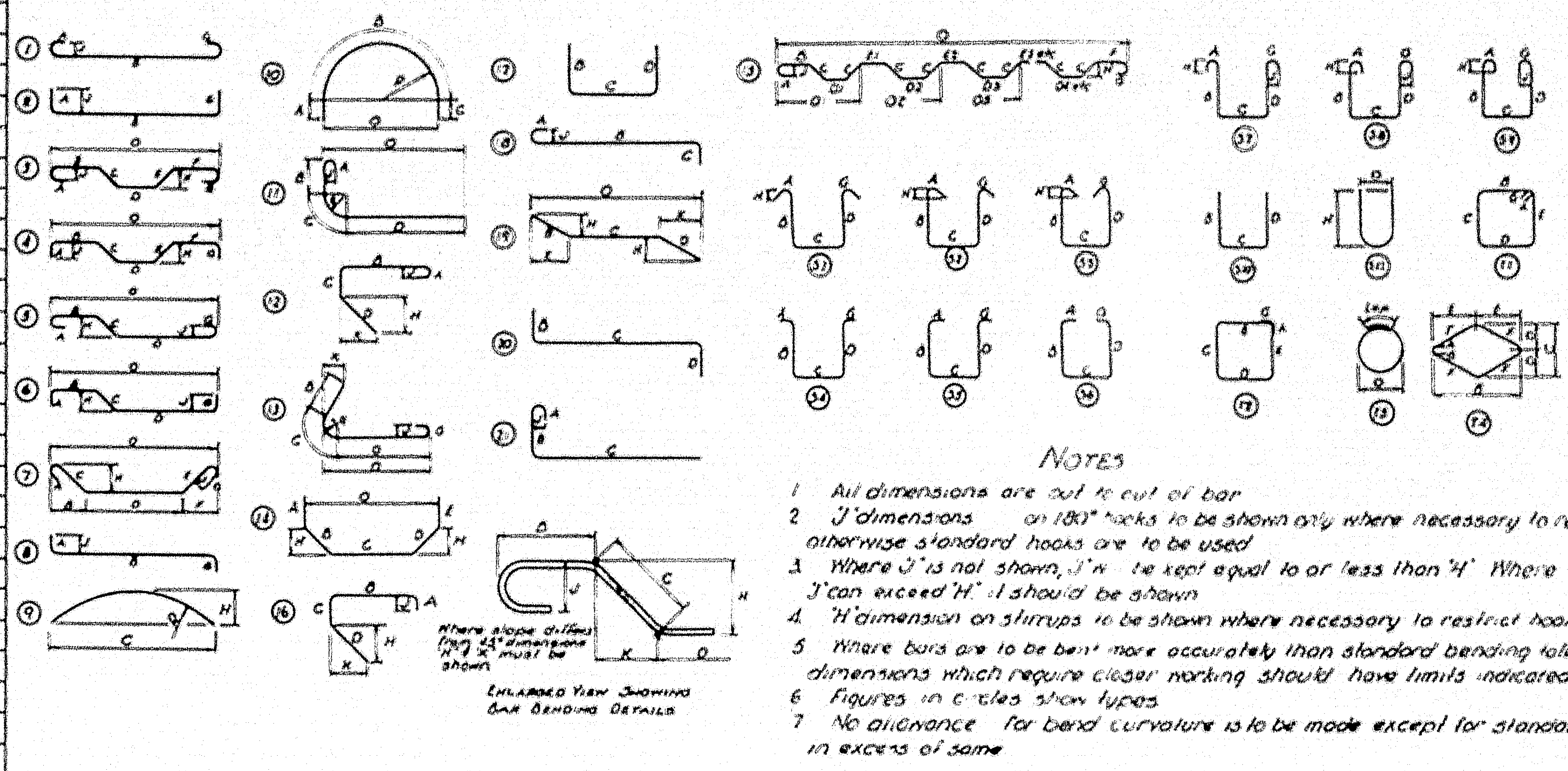

Enlarged view showing bar bending details
Where slope differs from 45° dimensions H & K must be shown

NOTES

1. All dimensions are out to out of bar
2. 'J' dimensions on 180° hooks to be shown only where necessary to restrict hook size, otherwise standard hooks are to be used
3. Where 'J' is not shown, 'J' will be kept equal to or less than 'H'. Where 'J' can exceed 'H' it should be shown
4. 'H' dimension on stirrups to be shown where necessary to restrict hooks
5. Where bars are to be bent more accurately than standard bending tolerances, bending dimensions which require closer working should have limits indicated
6. Figures in circles show types
7. No allowance for bend curvature is to be made except for standard hook & radii in excess of same

Item	No Pieces	Size	Length	Mark	Type	A	B	C	D	E	F	G	H	J	K	R	O
163																	
164	1	6	6'-4"	ANE 654	Str												
165	1	6	5'-10"	ANE 655	Str												
166																	
167																	
168																	
169																	
170																	
171																	
172																	
173																	
174																	
175																	
176																	
177																	
178																	
179																	
180																	
181																	
182																	
183																	
184																	
185																	
186																	
187																	
188																	
189																	
190																	

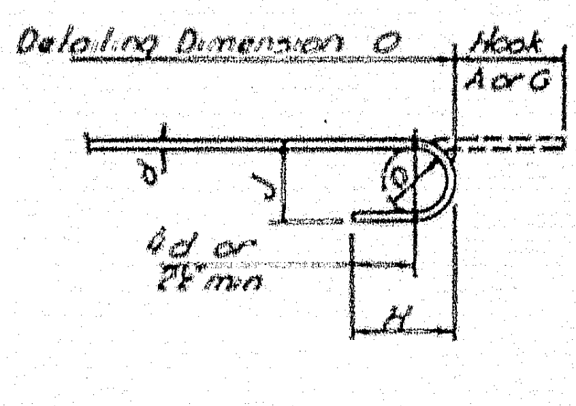

STANDARD HOOK DETAIL

BAR SIZES

Equivalent Size	Present (Numbers)
¼"φ	#2
⅜"φ	#3
½"φ	#4
⅝"φ	#5
¾"φ	#6
⅞"φ	#7
1"φ	#8
1"□	#9
1⅛"□	#10
1¼"□	#11

8. Bar reinforcement metal shall conform to the requirements of the Standard Specifications for new Billet-Steel Concrete Reinforcement Bars (Intermediate Grade) Serial Designation A.A.S.H.O. M31-48 or its latest revision.
All bars shall be deformed to conform with A.S.T.M. Specifications A305-49.

NORTHEASTERLY ABUTMENT

Footing	2115 #
Stem	1236 #
Wings	1130 #
Total	4481 #

THE CLARKESON ENGINEERING CO., INC.

DESIGN H P	CHECK C J M	BRIDGE NO SURVEY
DRAWN S A L	APPROVED W.A.H. C.J.M.	PLOT

STATE HIGHWAY COMMISSION

INTERSTATE #95
OVER
MESSALONSKEE STREAM & QUARRY ROAD (RELOC.)
IN THE CITY OF
WATERVILLE
KENNEBEC COUNTY
REINFORCEMENT SCHEDULE

SHEET 9 OF 13 SHEETS
AUGUSTA, MAINE

78-206

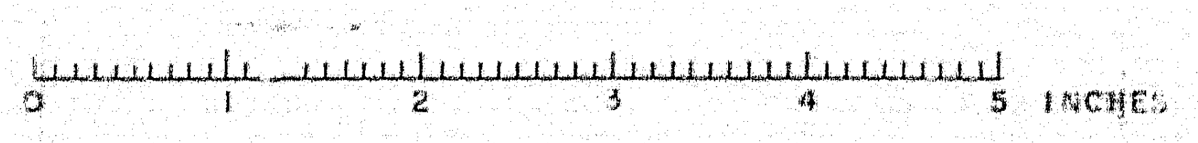

B.P.R. REG NO	STATE	PROJECT NO.	SHEET NO.	TOTAL SHEETS
1	MAINE	I-95-6 (23)		

WATERVILLE INTERSTATE

Item	No Pieces	Size	Length	Mark	Type	A	B	C	D	E	F	G	H	J	K	R	O
					SOUTHEASTERLY ABUTMENT												
1																	
2		FOOTING															
3																	
4	86	5	5'-8"	ASE-501	Str												
5	1	↑	3'-5"	ASE-502	↑												
6	1		3'-7"	ASE-503													
7	1		3'-8"	ASE-504													
8	1		3'-10"	ASE-505													
9	1		4'-0"	ASE-506													
10	1		4'-2"	ASE-507													
11	1		4'-4'	ASE-508													
12	1		4'-5"	ASE-509													
13	1		4'-7"	ASE-510													
14	1		4'-9"	ASE-511													
15	1		4'-11"	ASE-512													
16	1		5'-1"	ASE-513													
17	1		5'-2"	ASE-514													
18	1		5'-4"	ASE-515													
19	1		5'-6"	ASE-516													
20	20		19'-6"	ASE-517													
21	7		17'-0"	ASE-518													
22	7		15'-0"	ASE-519	↓												
23	4	↓	4'-0"	ASE-520	Str												
24	35	5	8'-4"	ASE-521	20		2'-0"	6'-4"									
25																	
26	3	6	12'-0"	ASE-601	20		4'-6"	7'-6"									
27																	
28	1	6	6'-9"	ASE-602	20		2'-3"	4'-6"									
29	1	↑	6'-11"	ASE-603	↑		2'-5"	↑									
30	1		7'-0	ASE-604			2'-6"										
31	1		7'-2"	ASE-605			2'-8"										
32	1		7'-4"	ASE-606			2'-10"										
33	1		7'-6"	ASE-607			3'-0"										
34	1		7'-8"	ASE-608			3'-2"										
35	1		7'-10"	ASE-609			3'-4"										
36	1		7'-11"	ASE-610			3'-5"										
37	1		8'-1"	ASE-611			3'-7"										
38	1		8'-3"	ASE-612			3'-9"										
39	1		8'-5"	ASE-613			3'-11"										
40	1		8'-6"	ASE-614			4'-0"										
41	1		8'-8"	ASE-615			4'-2"										
42	1	↓	8'-10"	ASE-616	↓		4'-4"	↓									
43	14	6	9'-0"	ASE-617	20		4'-6"	4'-6"									
44																	
45																	
46		STEM															
47																	
48	24	4	3'-2"	ASE-401	Str												
49	10	4	34'-8"	ASE-402	Str												
50																	
51	35	5	4'-11"	ASE-522	20		0'-11"	4'-0"									
52	35	5	8'-5"	ASE-523	17		5'-4"	0'-6"	2'-7"								
53	32	5	4'-0"	ASE-524	Str												
54																	
55	4	6	34'-8"	ASE-618	Str												
56	21	6	4'-0"	ASE-619	17		2'-0"	2'-0"									
57																	
58																	
59																	
60		NORTHERLY WING															
61																	
62	8	4	15'-2"	ASE-403	Str												
63	2	↑	13'-0"	ASE-404	↑												
64	2		10'-10"	ASE-405													
65	2		8'-9"	ASE-406													
66	2		6'-7"	ASE-407													
67	2		4'-4"	ASE-408													
68	2	↓	1'-3"	ASE-409	↓												
69	2	4	15'-1"	ASE-410	Str												
70																	
71	1	5	3'-4"	ASE-525	Str												
72	1	↑	3'-10"	ASE-526	↑												
73	1		4'-3"	ASE-527													
74	1		4'-9"	ASE-528													
75	1		5'-2"	ASE-529													
76	1		5'-8"	ASE-530													
77	1		6'-1"	ASE-531													
78	1		6'-7"	ASE-532													
79	1	↓	7'-1"	ASE-533	↓												
80	1	5	7'-6"	ASE-534	Str												
81																	

Item	No Pieces	Size	Length	Mark	Type	A	B	C	D	E	F	G	H	J	K	R	O
82																	
83	1	5	7'-11"	ASE-535	Str												
84	1	↑	8'-5"	ASE-536	↑												
85	1		8'-10"	ASE-537													
86	1	↓	9'-4"	ASE-538	↓												
87	2	5	9'-8"	ASE-539	Str												
88																	
89	1	6	3'-4"	ASE-620	Str												
90	1	↑	3'-10"	ASE-621	↑												
91	1		4'-3"	ASE-622													
92	1		4'-9"	ASE-623													
93	1		5'-2"	ASE-624													
94	1		5'-8"	ASE-625													
95	1		6'-1"	ASE-626													
96	1		6'-7"	ASE-627													
97	1		7'-1"	ASE-628													
98	1		7'-6"	ASE-629													
99	1		7'-11"	ASE-630													
100	1		8'-5"	ASE-631													
101	1		8'-10"	ASE-632													
102	1	↓	9'-4"	ASE-633	↓												
103	2	6	9'-8"	ASE-634	Str												
104																	
105																	
106																	
107		SOUTHERLY WING															
108																	
109	6	4	12'-9"	ASE-411	Str												
110	8	↑	15'-2"	ASE-412	↑												
111	2		14'-10"	ASE-413													
112	2		12'-9"	ASE-414													
113	2		10'-7"	ASE-415													
114	2		8'-5"	ASE-416													
115	2		6'-3"	ASE-417													
116	2	↓	4'-0"	ASE-418	↓												
117	2	4	1'-3"	ASE-419	Str												
118																	
119	2	5	9'-9"	ASE-540	Str												
120	1	↑	9'-4"	ASE-541	↑												
121	1		11'-11"	ASE-542													
122	1		11'-5"	ASE-543													
123	1		10'-11"	ASE-544													
124	1		10'-6"	ASE-545													
125	1		10'-0"	ASE-546													
126	1		9'-6"	ASE-547													
127	1		9'-1"	ASE-548													
128	1		8'-7"	ASE-549													
129	1		8'-1"	ASE-550													
130	1		7'-8"	ASE-551													
131	1		7'-2	ASE-552													
132	1	↓	6'-9"	ASE-553	↓												
133	1	5	6'-3"	ASE-554	Str												
134																	
135	2	6	9'-9"	ASE-634	Str												
136	1	↑	9'-4"	ASE-635	↑												
137	1		11'-11"	ASE-636													
138	1		11'-5"	ASE-637													
139	1		10'-11"	ASE-638													
140	1		10'-6"	ASE-639													
140	1		10'-0"	ASE-640													
141	1		9'-6"	ASE-641													
142	1		9'-1"	ASE-642													
143	1		8'-7"	ASE-643													
144	1		8'-1"	ASE-644													
145	1		7'-8"	ASE-645													
146	1		7'-2"	ASE-646													
147	1	↓	6'-9"	ASE-647	↓												
148	1	6	6'-3"	ASE-648	Str												
149																	
150																	
151																	
152																	
153																	
154																	
155																	
156																	
157																	
158																	
159																	
160																	
161																	
162																	

TYPICAL BAR BENDS

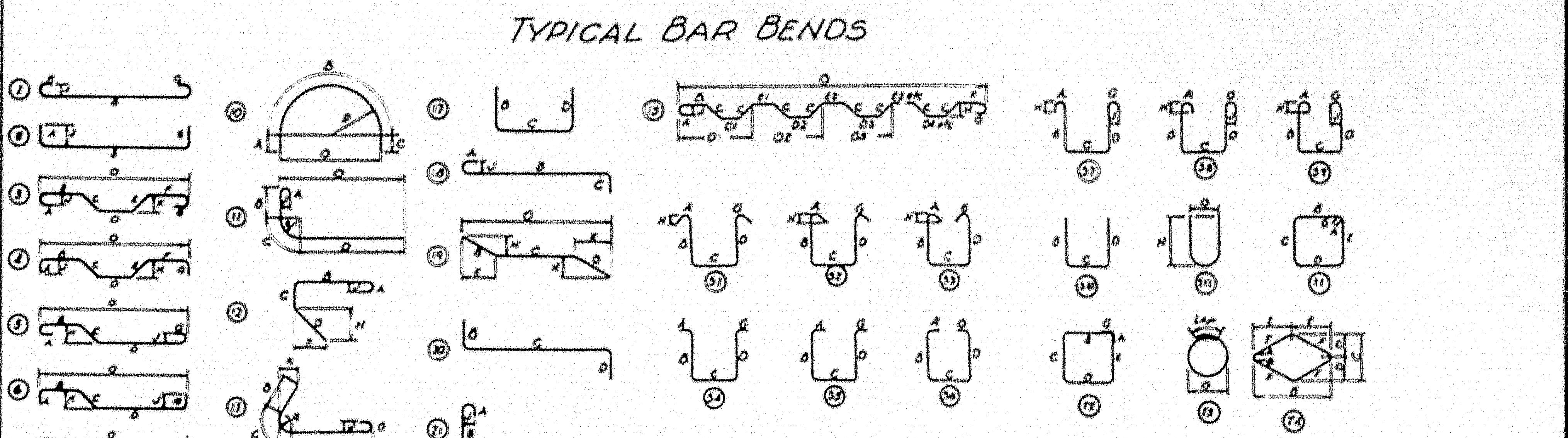

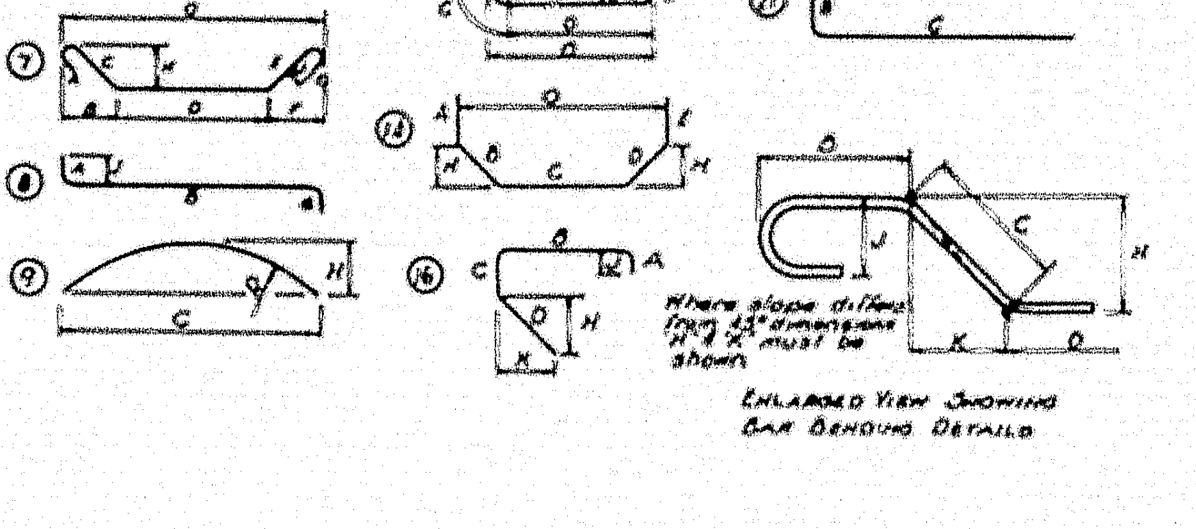

Where slope differs from 45° dimensions "H" & "K" must be shown
ENLARGED VIEW SHOWING BAR BENDING DETAILS

NOTES

1. All dimensions are out to out of bar
2. "J" dimensions on 180° hooks to be shown only where necessary to restrict hook size, otherwise standard hooks are to be used
3. Where "J" is not shown, "J" will be kept equal to or less than "H". Where "J" can exceed "H", it should be shown
4. "H" dimension on stirrups to be shown where necessary to restrict hooks
5. Where bars are to be bent more accurately than standard bending tolerances, bending dimensions which require closer working should have limits indicated.
6. Figures in circles show types.
7. No allowance for bend curvature is to be made except for standard hook & radii in excess of same.

Item	No Pieces	Size	Length	Mark	Type	A	B	C	D	E	F	G	H	J	K	R	O
163																	
164																	
165																	
166																	
167																	
168																	
169																	
170																	
171																	
172																	
173																	
174																	
175																	
176																	
177																	
178																	
179																	
180																	
181																	
182																	
183																	
184																	
185																	
186																	
187																	
188																	
189																	
190																	

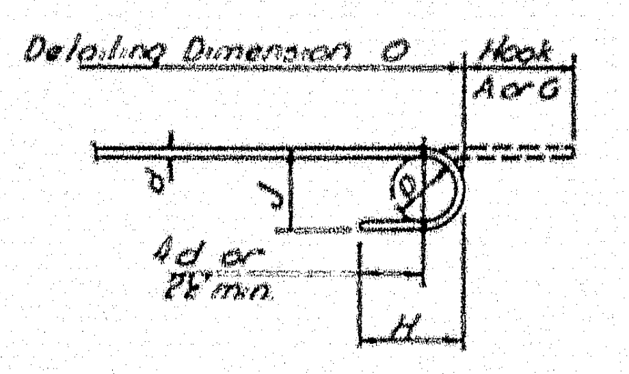

STANDARD HOOK DETAIL

BAR SIZES

Equivalent Size	Present (Numbers)
¼"φ	#2
⅜"φ	#3
½"φ	#4
⅝"φ	#5
¾"φ	#6
⅞"φ	#7
1"φ	#8
1"□	#9
1⅛"□	#10
1¼"□	#11

8. Bar reinforcement metal shall conform to the requirements of the Standard Specifications for new Billet-Steel Concrete Reinforcement Bars (Intermediate Grade) Serial Designation A.A.S.H.O. M31-48 or its latest revision.
All bars shall be deformed to conform with A.S.T.M. Specifications A305-49.

SOUTHEASTERLY ABUTMENT

Footing	1954 #
Stem	1236 #
Wings	1019 #
Total	4209 #

THE CLARKESON ENGINEERING CO., INC.

DESIGN H P	CHECK C J M	BRIDGE NO. SURVEY
DRAWN F.E.T.	APPROVED W.A.H.-C.J.M.	PLOT

STATE HIGHWAY COMMISSION
INTERSTATE #95
OVER
MESSALONSKEE STREAM
& QUARRY ROAD (RELOC.)
IN THE CITY OF
WATERVILLE
KENNEBEC COUNTY
REINFORCEMENT SCHEDULE
SHEET 10 OF 13 SHEETS
AUGUSTA, MAINE

78-207

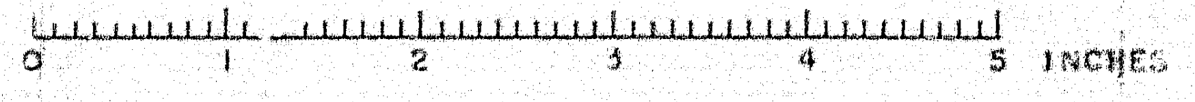

B.P.R. REG. NO.	STATE	PROJECT NO.	SHEET NO.	TOTAL SHEETS
1	MAINE	I-95-6(23)		

WATERVILLE INTERSTATE

TYPICAL BAR BENDS

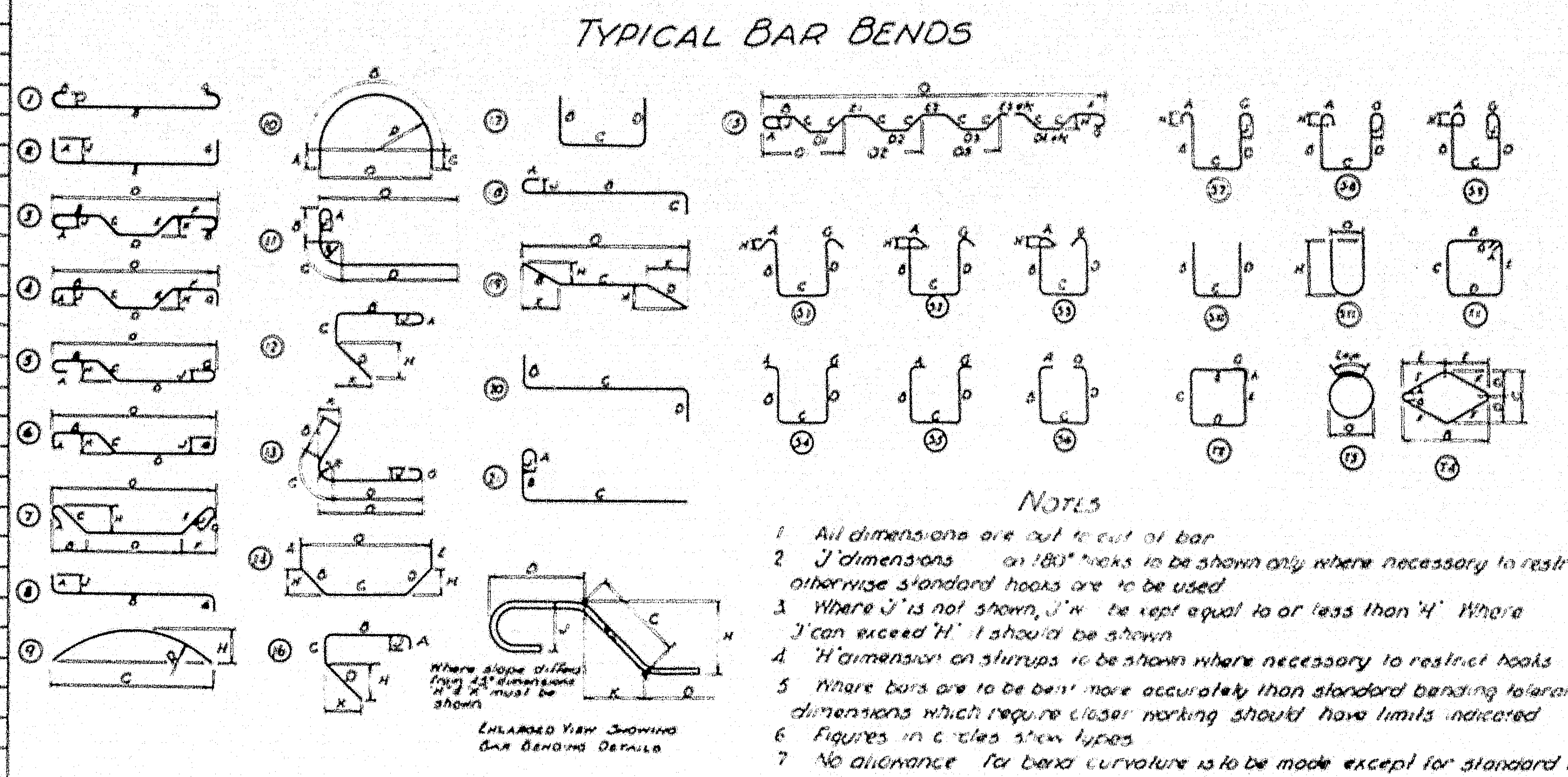
Where slope differs from 45° dimensions H & K must be shown
Enlarged View Showing Bar Bending Details

NOTES

1. All dimensions are out to out of bar
2. 'J' dimensions on 180° hooks to be shown only where necessary to restrict hook size, otherwise standard hooks are to be used
3. Where 'J' is not shown, 'J' will be kept equal to or less than 'H'. Where 'J' can exceed 'H' it should be shown
4. 'H' dimension on stirrups to be shown where necessary to restrict hooks
5. Where bars are to be bent more accurately than standard bending tolerances, bending dimensions which require closer working should have limits indicated
6. Figures in circles show types
7. No allowance for bend curvature is to be made except for standard hook & radii in excess of same

Item	No Pieces	Size	Length	Mark	Type	A	B	C	D	E	F	G	H	J	K	R	O
	PIER A FOOTING																
1	(PIER L FOOTING SIMILAR)																
2	41	11	21'-6"	FA 1101	Str												
3	32	11	26'-0"	FA 1102	Str												
4	70	11	8'-3"	FA 1103	Str												
5																	
6	17	8	26'-0"	FA 804	Str												
7	21	8	21'-6"	FA 805	Str												
8																	
9	12	7	21'-6"	FA 707	Str												
10	10	7	26'-0"	FA 708	Str												
11																	
12																	
13	PIER B FOOTING																
14	(PIER C,M,N FOOTING SIMILAR)																
15	70	11	14'-0"	FB 1105	Str												
16	4	11	19'-6"	FB 1106	Str												
17	32	11	24'-6"	FB 1109	Str												
18	48	11	38'-6"	FB 1108	Str												
19																	
20	68	7	24'-6"	FB 703	Str												
21	47	7	38'-6"	FB 704	Str												
22	17	7	38'-6"	FB 705	17		10'-6"	17'-6"	10'-6"								
23	23	7	33'-10"	FB 706	17		10'-5"	13'-0"	10'-5"								
24																	
25																	
26	PIER D FOOTING																
27	(PIER O FOOTING SIMILAR)																
28	70	11	7'-6"	FD 1104	Str												
29																	
30	24	10	16'-6"	FD 1002	Str												
31	24	10	22'-6"	FD 1003	Str												
32																	
33	17	5	22'-6"	FD 501	Str												
34	23	5	16'-6"	FD 502	Str												
35																	
36																	
37	PIER E FOOTING																
38	(PIER F,G,P,Q,R FOOTING SIMILAR)																
39	66	10	21'-0"	FE 1006	Str												
40																	
41	28	8	14'-6"	FE 801	Str												
42	24	8	20'-6"	FE 802	Str												
43																	
44	15	5	20'-6"	FE 503	Str												
45	21	5	14'-6"	FE 504	Str												
46																	
47																	
48	PIER H FOOTING																
49	34	10	18'-6"	FH 1002	Str												
50	24	10	22'-6"	FH 1003	Str												
51	66	10	21'-0"	FH 1006	Str												
52																	
53	19	7	22'-6"	FH 701	Str												
54	23	7	18'-6"	FH 702	Str												
55																	
56																	
57	PIER J FOOTING																
58	(PIER T FOOTING SIMILAR)																
59	34	10	18'-6"	FJ 1002	Str												
60	24	10	22'-6"	FJ 1003	Str												
61	62	10	7'-0"	FJ 1005	Str												
62																	
63	19	7	22'-6"	FJ 701	Str												
64	23	7	18'-6"	FJ 702	Str												
65																	
66																	
67	PIER K FOOTING																
68	(PIER S,U FOOTING SIMILAR)																
69	62	10	6'-6"	FK 1004	Str												
70																	
71	28	8	14'-6"	FK 801	Str												
72	19	8	18'-6"	FK 803	Str												
73																	
74	15	5	18'-6"	FK 505	Str												
75	19	5	14'-6"	FK 504	Str												
76																	
77																	
78																	
79																	
80																	
81																	
82		VERTICAL COLUMN STEEL															
83																	
84		PIER A															
85	70	11	21'-0"	CA 1107	Str												
86	14	11	16'-0"	CA 1110	9			15'-6"					1'-6"			19'-5"	
87	66	10	21'-0"	CA 1006	Str												
88	62	10	24'-0"	CA 1007	Str												
89																	
90		PIER B															
91	70	11	21'-0"	CB 1107	Str												
92	14	11	16'-0"	CB 1110	9			15'-6"					1'-6"			19'-5"	
93	66	10	21'-0"	CB 1006	Str												
94	62	10	27'-0"	CB 1008	Str												
95																	
96		PIER C															
97	70	11	21'-0"	CC 1107	Str												
98	14	11	16'-0"	CC 1110	9			15'-6"					1'-6"			19'-5"	
99	66	10	21'-0"	CC 1006	Str												
100	62	10	30'-0"	CC 1013	Str												
101																	
102		PIER D															
103	70	11	21'-0"	CD 1107	Str												
104	14	11	16'-0"	CD 1110	9			15'-6"					1'-6"			19'-5"	
105	66	10	21'-0"	CD 1006	Str												
106	62	10	24'-0"	CD 1007	Str												
107																	
108		PIER E															
109	14	11	16'-0"	CE 1110	9			15'-6"					1'-6"			19'-5"	
110	62	10	28'-0"	CE 1010	Str												
111																	
112		PIER F															
113	14	11	16'-0"	CF 1110	9			15'-6"					1'-6"			19'-5"	
114	62	10	23'-0	CF 1009	Str												
115																	
116		PIER G															
117	14	11	16'-0"	CG 1110	9			15'-6"					1'-6"			19'-5"	
118	62	10	28'-0"	CG 1010	Str												
119																	
120		PIER H															
121	14	11	16'-0"	CH 1110	9			15'-6"					1'-6"			19'-5"	
122	62	10	22'-0"	CH 1012	Str												
123																	
124		PIER J															
125	14	11	16'-0"	CJ 1110	9			15'-6"					1'-6"			19'-5"	
126	62	10	30'-0"	CJ 1013	Str												
127																	
128		PIER K															
129	14	11	16'-0"	CK 1110	9			15'-6"					1'-6"			19'-5"	
130	62	10	18'-6"	CK 1002	Str												
131																	
132		PIER L															
133	70	11	21'-0"	CL 1107	Str												
134	14	11	16'-0"	CL 1110	9			15'-6"					1'-6"			19'-5"	
135	66	10	21'-0"	CL 1006	Str												
136	62	10	23'-0"	CL 1009	Str												
137																	
138		PIER M															
139	70	11	21'-0"	CM 1107	Str												
140	14	11	16'-0"	CM 1110	9			15'-6"					1'-6"			19'-5"	
140	66	10	21'-0"	CM 1006	Str												
141	62	10	26'-0"	CM 1011	Str												
142																	
143		PIER N															
144	70	11	21'-0"	CN 1107	Str												
145	14	11	16'-0"	CN 1110	9			15'-6"					1'-6"			19'-5"	
146	66	10	21'-0"	CN 1006	Str												
147	62	10	28'-0"	CN 1010	Str												
148																	
149		PIER O															
150	70	11	21'-0"	CO 1107	Str												
151	14	11	16'-0"	CO 1110	9			15'-6"					1'-6"			19'-5"	
152	128	10	21'-0"	CO 1006	Str												
153																	
154		PIER P															
155	14	11	16'-0"	CP 1110	9			15'-6"					1'-6"			19'-5"	
156	62	10	23'-0"	CP 1009	Str												
157																	
158		PIER Q															
159	14	11	16'-0"	CQ 1110	9			15'-6"					1'-6"			19'-5"	
160	62	10	23'-0"	CQ 1009	Str												
161																	
162																	
163		PIER R															
164	14	11	16'-0"	CR 1110	9			15'-6"					1'-6"			19'-5"	
165	62	10	26'-0"	CR 1011	Str												
166																	
167		PIER S															
168	14	11	16'-0"	CS 1110	9			15'-6"					1'-6"			19'-5"	
169	62	10	27'-0"	CS 1008	Str												
170																	
171		PIER T															
172	14	11	16'-0"	CT 1110	9			15'-6"					1'-6"			19'-5"	
173	62	10	27'-0"	CT 1008	Str												
174																	
175		PIER U															
176	14	11	16'-0"	CU 1110	9			15'-6"					1'-6"			19'-5"	
177	62	10	14'-9"	CU 1014	Str												
178																	
179																	
180																	
181																	
182																	
183																	
184																	

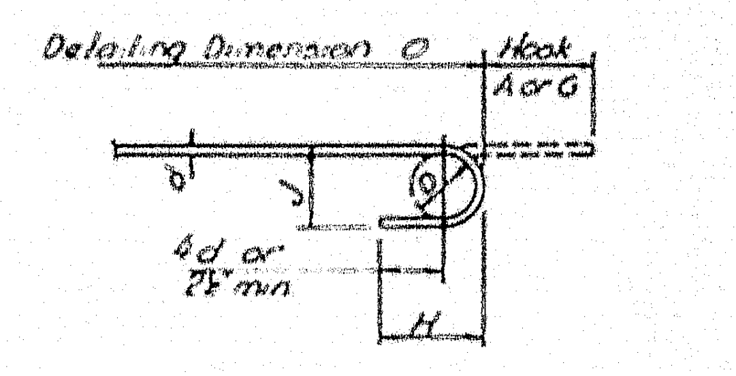

STANDARD HOOK DETAIL

BAR SIZES

Equivalent Size	Present (Numbers)
¼"φ	#2
⅜"φ	#3
½"φ	#4
⅝"φ	#5
¾"φ	#6
⅞"φ	#7
1"φ	#8
1"□	#9
1⅛"□	#10
1¼"□	#11

PIER	FOOTING	STEM	CAP	TOTAL
A	15,615	25,923	10,915	52,453
B	29,620	27,030	10,915	67,565
C	29,620	28,027	13,510	71,157
D	7,610	25,825	4,499	37,934
E	8,998	11,391	4,499	24,888
F	8,998	9,697	4,499	23,194
G	8,998	11,391	4,499	24,888
H	12,733	9,252	4,499	26,484
J	8,638	10,943	4,499	24,080
K	4,332	6,809	4,499	15,640
L	15,615	25,464	10,915	51,994
M	29,620	26,561	10,915	67,096
N	29,620	27,297	13,510	70,427
O	7,610	24,735	4,499	36,844
P	8,998	9,697	4,499	23,194
Q	8,998	9,608	4,499	23,105
R	8,998	10,765	4,499	24,262
S	4,332	9,873	4,499	18,704
T	8,638	9,873	4,499	23,010
U	4,332	5,463	4,499	14,294

Total .... 721,213#

8. Bar reinforcement metal shall conform to the requirements of the Standard Specifications for new Billet-Steel Concrete Reinforcement Bars (Intermediate Grade) Serial Designation A.A.S.H.O. M31-48 or its latest revision.
All bars shall be deformed to conform with A.S.T.M. Specifications A 305-49.

THE CLARKESON ENGINEERING CO., INC.

DESIGN C J M	CHECK H P	BRIDGE NO
		SURVEY
DRAWN A L	APPROVED W.A.H.B.C.J.M.	PLOT

STATE HIGHWAY COMMISSION

INTERSTATE #95
OVER
MESSALONSKEE STREAM & QUARRY ROAD (RELOC.)

IN THE CITY OF
WATERVILLE
KENNEBEC COUNTY

REINFORCEMENT SCHEDULE

SHEET 11 OF 13 SHEETS
AUGUSTA, MAINE

78-208

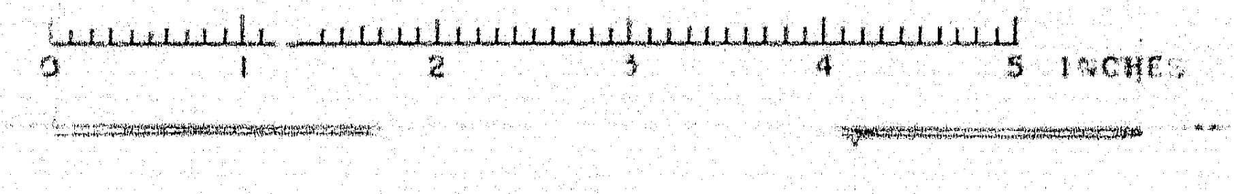

B.P.R. REG. NO.	STATE	PROJECT NO.	SHEET NO.	TOTAL SHEETS
1	MAINE	I-95-6(23)		

WATERVILLE INTERSTATE

Item	No Pieces	Size	Length	Mark	Type	A	B	C	D	E	F	G	H	J	K	R	O
1	14	5	16'-0"	ST500	T-1	0'-5"	3'-5½"	4'-1½"	3'-5½"	4'-1½"		0'-5"					
2	14	↓	16'-1"	ST501	↓	↓	3'-6"	↓	3'-6"	↓		↓					
3	14		16'-2"	ST502			3'-6½"		3'-6½"								
4	14		16'-3"	ST503			3'-7"		3'-7"								
5	14		16'-4"	ST504			3'-7½"		3'-7½"								
6	40		16'-5"	ST505			3'-8"		3'-8"								
7	40		16'-6"	ST506			3'-8½"		3'-8½"								
8	40		16'-7"	ST507			3'-9"		3'-9"								
9	38		16'-8"	ST508			3'-9½"		3'-9½"								
10	34		16'-9"	ST509			3'-10"		3'-10"								
11	30		16'-10"	ST510			3'-10½"		3'-10½"								
12	32		17'-0"	ST511			3'-11½"		3'-11½"								
13	30		17'-1"	ST512			4'-0"		4'-0"								
14	32		17'-2"	ST513			4'-0½"		4'-0½"								
15	32		17'-3"	ST514			4'-1"		4'-1"								
16	32		17'-4"	ST515			4'-1½"		4'-1½"								
17	38		17'-5"	ST516			4'-2"		4'-2"								
18	36		17'-6"	ST517			4'-2½"		4'-2½"								
19	40		17'-7"	ST518			4'-3"		4'-3"								
20	44		17'-9"	ST519			4'-4"		4'-4"								
21	42		17'-10"	ST520			4'-4½"		4'-4½"								
22	42		17'-11"	ST521			4'-5"		4'-5"								
23	34		18'-0"	ST522			4'-5½"		4'-5½"								
24	34		18'-1"	ST523			4'-6"		4'-6"								
25	32		18'-2"	ST524			4'-6½"		4'-6½"								
26	30		18'-3"	ST525			4'-7"		4'-7"								
27	28		18'-4"	ST526			4'-7½"		4'-7½"								
28	28		18'-6"	ST527			4'-8½"		4'-8½"								
29	24		18'-7"	ST528			4'-9"		4'-9"								
30	22		18'-8"	ST529			4'-9½"		4'-9½"								
31	24		18'-9"	ST530			4'-10"		4'-10"								
32	20		18'-10"	ST531			4'-10½"		4'-10½"								
33	20		18'-11"	ST532			4'-11"		4'-11"								
34	4		19'-0"	ST533			4'-11½"		4'-11½"								
35	14		19'-1"	ST534			5'-0"		5'-0"								
36	14		19'-3"	ST535			5'-1"		5'-1"								
37	10		19'-4"	ST536			5'-1½"		5'-1½"								
38	14		19'-5"	ST537			5'-2"		5'-2"								
39	14		19'-6"	ST538			5'-2½"		5'-2½"								
40	16		19'-7"	ST539			5'-3"		5'-3"								
41	16		19'-8"	ST540			5'-3½"		5'-3½"								
42	16		19'-9"	ST541			5'-4"		5'-4"								
43	16		19'-10"	ST542			5'-4½"		5'-4½"								
44	16		20'-0"	ST543			5'-5½"		5'-5½"								
45	16		20'-1"	ST544			5'-6"		5'-6"								
46	16		20'-2"	ST545			5'-6½"		5'-6½"								
47	16		20'-3"	ST546			5'-7"		5'-7"								
48	16		20'-4"	ST547			5'-7½"		5'-7½"								
49	16		20'-5"	ST548			5'-8"		5'-8"								
50	16		20'-6"	ST549			5'-8½"		5'-8½"								
51	16		20'-7"	ST550			5'-9"		5'-9"								
52	14		20'-9"	ST551			5'-10"		5'-10"								
53	14		20'-10"	ST552			5'-10½"		5'-10½"								
54	12		20'-11"	ST553			5'-11"		5'-11"								
55	10		21'-0"	ST554			5'-11½"		5'-11½"								
56	8		21'-1"	ST555			6'-0"		6'-0"								
57	6		21'-2"	ST556			6'-0½"		6'-0½"								
58	6		21'-3"	ST557			6'-1"		6'-1"								
59	2	↓	21'-4"	ST558	↓	↓	6'-1½"	↓	6'-1½"	↓		↓					
60	2	5	21'-5"	ST559	T-1	0'-5"	6'-2"	4'-1½"	6'-2"	4'-1½"		0'-5"					
61																	
62																	
63																	
64	198	5	27'-0"	SS500	T-1	0'-5"	10'-5"	2'-8"	10'-5"	2'-8"		0'-5"					
65	470	5	27'-4"	SS501	T-1	0'-5"	10'-7"	2'-8"	10'-7"	2'-8"		0'-5"					
66																	
67																	
68																	
69																	
70																	
71																	
72																	
73																	
74																	
75																	
76																	
77																	
78																	
79																	
80																	
81																	

Item	No Pieces	Size	Length	Mark	Type	A	B	C	D	E	F	G	H	J	K	R	O
82																	
83	7	5	20'-4"	S500	T-1	0'-5"	3'-5½"	6'-3½"	3'-5½"	6'-3½"		0'-5"					
84	7	↓	20'-5"	S501	↓	↓	3'-6"	↓	3'-6"	↓		↓					
85	7		20'-6"	S502			3'-6½"		3'-6½"								
86	7		20'-7"	S503			3'-7"		3'-7"								
87	7		20'-8"	S504			3'-7½"		3'-7½"								
88	20		20'-9"	S505			3'-8"		3'-8"								
89	20		20'-10"	S506			3'-8½"		3'-8½"								
90	20		20'-11"	S507			3'-9"		3'-9"								
91	19		21'-0"	S508			3'-9½"		3'-9½"								
92	17		21'-1"	S509			3'-10"		3'-10"								
93	15		21'-2"	S510			3'-10½"		3'-10½"								
94	16		21'-4"	S511			3'-11½"		3'-11½"								
95	15		21'-5"	S512			4'-0"		4'-0"								
96	16		21'-6"	S513			4'-0½"		4'-0½"								
97	16		21'-7"	S514			4'-1"		4'-1"								
98	16		21'-8"	S515			4'-1½"		4'-1½"								
99	19		21'-9"	S516			4'-2"		4'-2"								
100	18		21'-10"	S517			4'-2½"		4'-2½"								
101	20		21'-11"	S518			4'-3"		4'-3"								
102	22		22'-1"	S519			4'-4"		4'-4"								
103	21		22'-2"	S520			4'-4½"		4'-4½"								
104	21		22'-3"	S521			4'-5"		4'-5"								
105	17		22'-4"	S522			4'-5½"		4'-5½"								
106	17		22'-5"	S523			4'-6"		4'-6"								
107	16		22'-6"	S524			4'-6½"		4'-6½"								
108	15		22'-7"	S525			4'-7"		4'-7"								
109	14		22'-8"	S526			4'-7½"		4'-7½"								
110	14		22'-10"	S527			4'-8½"		4'-8½"								
111	12		22'-11"	S528			4'-9"		4'-9"								
112	11		23'-0"	S529			4'-9½"		4'-9½"								
113	12		23'-1"	S530			4'-10"		4'-10"								
114	10		23'-2"	S531			4'-10½"		4'-10½"								
115	10		23'-3"	S532			4'-11"		4'-11"								
116	7		23'-4"	S533			4'-11½"		4'-11½"								
117	7		23'-5"	S534			5'-0"		5'-0"								
118	7		23'-7"	S535			5'-1"		5'-1"								
119	5		23'-8"	S536			5'-1½"		5'-1½"								
120	7		23'-9"	S537			5'-2"		5'-2"								
121	7		23'-10"	S538			5'-2½"		5'-2½"								
122	8		23'-11"	S539			5'-3"		5'-3"								
123	8		24'-0"	S540			5'-3½"		5'-3½"								
124	8		24'-1"	S541			5'-4"		5'-4"								
125	8		24'-2"	S542			5'-4½"		5'-4½"								
126	8		24'-4"	S543			5'-5½"		5'-5½"								
127	8		24'-5"	S544			5'-6"		5'-6"								
128	8		24'-6"	S545			5'-6½"		5'-6½"								
129	8		24'-7"	S546			5'-7"		5'-7"								
130	8		24'-8"	S547			5'-7½"		5'-7½"								
131	8		24'-9"	S548			5'-8"		5'-8"								
132	8		24'-10"	S549			5'-8½"		5'-8½"								
133	8		24'-11"	S550			5'-9"		5'-9"								
134	7		25'-1"	S551			5'-10"		5'-10"								
135	7		25'-2"	S552			5'-10½"		5'-10½"								
136	6		25'-3"	S553			5'-11"		5'-11"								
137	5		25'-4"	S554			5'-11½"		5'-11½"								
138	4		25'-5"	S555			6'-0"		6'-0"								
139	3		25'-6"	S556			6'-0½"		6'-0½"								
140	3		25'-7"	S557			6'-1"		6'-1"								
140	1	↓	25'-8"	S558	↓	↓	6'-1½"	↓	6'-1½"	↓		↓					
141	1	5	25'-9"	S559	T-1	0'-5"	6'-2"	6'-3½"	6'-2"	6'-3½"		0'-5"					
142																	
143																	
144																	
145																	
146																	
147																	
148																	
149																	
150																	
151																	
152																	
153																	
154																	
155																	
156																	
157																	
158																	
159																	
160																	
161																	
162																	

TYPICAL BAR BENDS

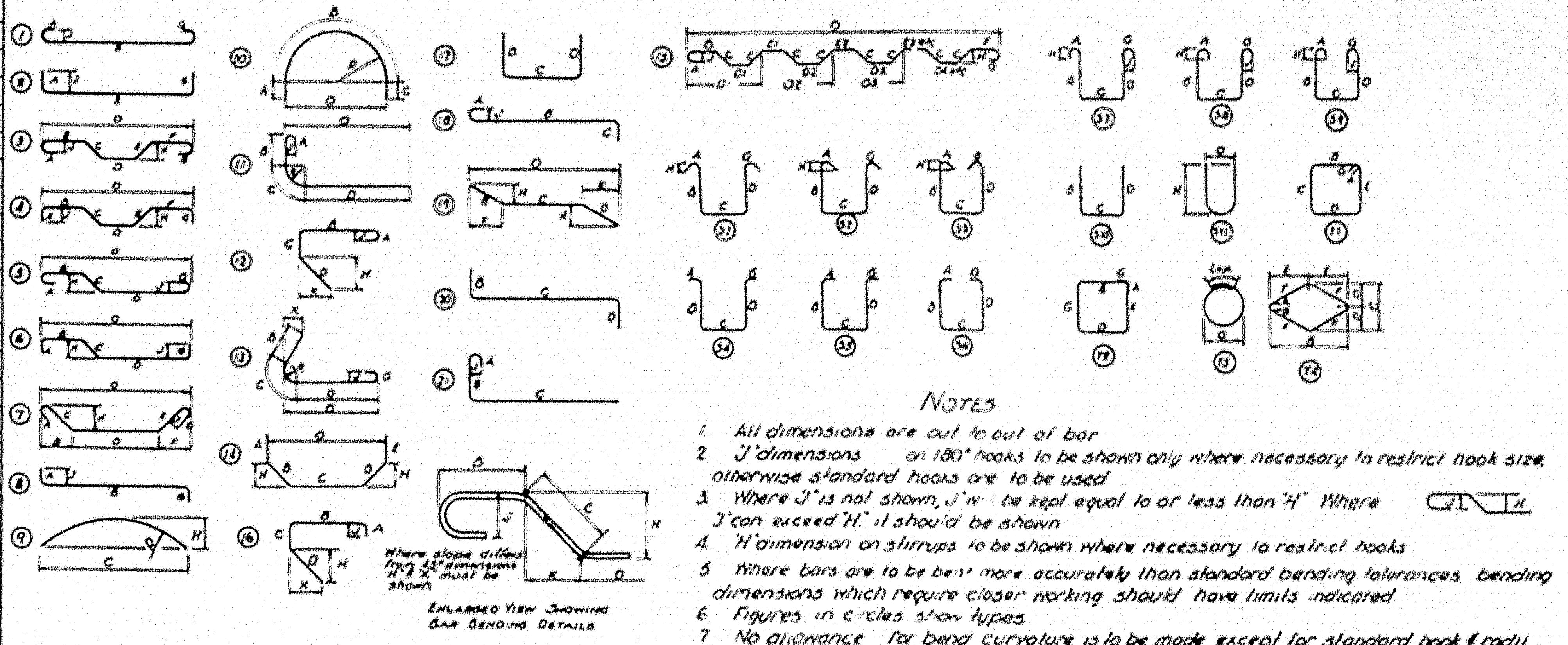
Where slope differs from 45° dimensions H & K must be shown
Enlarged View Showing Bar Bending Details

NOTES

1. All dimensions are out to out of bar
2. "J" dimensions on 180° hooks to be shown only where necessary to restrict hook size, otherwise standard hooks are to be used
3. Where "J" is not shown, "J" will be kept equal to or less than "H". Where "J" can exceed "H" it should be shown
4. "H" dimension on stirrups to be shown where necessary to restrict hooks
5. Where bars are to be bent more accurately than standard bending tolerances, bending dimensions which require closer working should have limits indicated
6. Figures in circles show types
7. No allowance for bend curvature is to be made except for standard hook & radii in excess of same

Item	No Pieces	Size	Length	Mark	Type	A	B	C	D	E	F	G	H	J	K	R	O
163																	
164																	
165																	
166																	
167																	
168																	
169																	
170																	
171																	
172																	
173																	
174																	
175																	
176																	
177																	
178																	
179																	
180																	
181																	
182																	
183																	
184																	
185																	
186																	
187																	
188																	
189																	
190																	

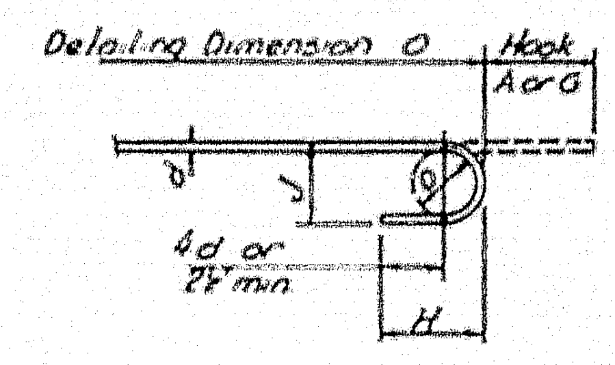

STANDARD HOOK DETAIL

BAR SIZES

Equivalent Size	Present (Numbers)
¼"φ	#2
⅜"φ	#3
½"φ	#4
⅝"φ	#5
¾"φ	#6
⅞"φ	#7
1"φ	#8
1"□	#9
1⅛"□	#10
1¼"□	#11

8. Bar reinforcement metal shall conform to the requirements of the Standard Specifications for new Billet-Steel Concrete Reinforcement Bars (Intermediate Grade) Serial Designation A.A.S.H.O. M31-48 or its latest revision.
All bars shall be deformed to conform with A.S.T.M. Specifications A305-49.

THE CLARKESON ENGINEERING CO., INC.

DESIGN C.J.M.	CHECK H.P.	BRIDGE NO. SURVEY
DRAWN F.E.T.	APPROVED W.A.H. & C.J.M.	PLOT

STATE HIGHWAY COMMISSION

INTERSTATE #95
OVER
MESSALONSKEE STREAM & QUARRY ROAD (RELOC.)
IN THE CITY OF
WATERVILLE
KENNEBEC COUNTY

PIER COLUMN TIES

SHEET 12 OF 13 SHEETS
AUGUSTA, MAINE

78-209

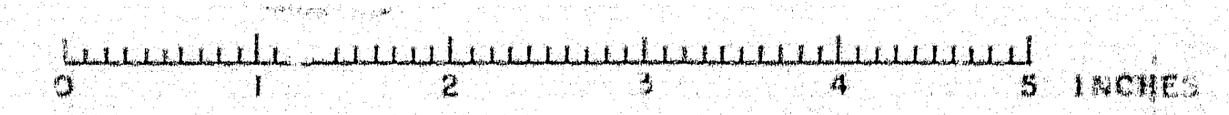

B.P.R. REG. NO.	STATE	PROJECT NO.	SHEET NO.	TOTAL SHEETS
1	MAINE	I-95-6(23)		

WATERVILLE INTERSTATE

Item	No Pieces	Size	Length	Mark	Type	A	B	C	D	E	F	G	H	J	K	R	O
	PIER A CAP STEEL																
1	(PIERS B, L, M, SIMILAR)																
2	10	11	37'-2"	PCA1101	1	1'-7"	34'-0"					1'-7"		1'-2"			34'-0"
3	14	↓	34'-0"	PCA1102	Str												
4	4		41'-0"	PCA1103	22	1'-7"	2'-6"	5'-5"	27'-0"	5'-5"	2'-6"	1'-7"	5'-1½"	1'-2"			31'-6½"
5	4		38'-2"	PCA1104	22	1'-7"	2'-6"	5'-3"	24'-6"	5'-3"	2'-6"	1'-7"	5'-0"	1'-2"			29'-0½"
6	4		35'-2"	PCA1105	22	1'-7"	2'-6"	5'-3"	21'-6"	5'-3"	2'-6"	1'-7"	5'-0"	1'-2"			26'-0½"
7	2		29'-2"	PCA1106	Str												
8	2		19'-8"	PCA1107	Str												
9	2	↑	14'-9"	PCA1108	Str												
10	2	11	11'-0"	PCA1109	Str												
11																	
12	10	6	3'-8"	PCA600	Str												
13																	
14	4	6	17'-3"	PCS600	T1	0'-5½"	2'-6½"	5'-7½"	2'-6½"	5'-7½"		0'-5½"					
15	8	↓	17'-4"	PCS601	↓	↓	↓	5'-8"	↓	5'-8"		↓					
16	8		17'-5"	PCS602				5'-8½"		5'-8½"							
17	4		17'-6"	PCS603				5'-9"		5'-9"							
18	↑		17'-7"	PCS604				5'-9½"		5'-9½"							
19			17'-8"	PCS605				5'-10"		5'-10"							
20			17'-10"	PCS606				5'-11"		5'-11"							
21			17'-11"	PCS607				5'-11½"		5'-11½"							
22			18'-0"	PCS608				6'-0"		6'-0"							
23			18'-2"	PCS609				6'-1"		6'-1"							
24			18'-4"	PCS610				6'-2"		6'-2"							
25			18'-6"	PCS611				6'-3"		6'-3"							
26			18'-10"	PCS612				6'-5"		6'-5"							
27			19'-0"	PCS613				6'-6"		6'-6"							
28			19'-4"	PCS614				6'-8"		6'-8"							
29			19'-8"	PCS615				6'-10"		6'-10"							
30			19'-11"	PCS616				6'-11½"		6'-11½"							
31			20'-3"	PCS617				7'-1½"		7'-1½"							
32			20'-8"	PCS618				7'-4"		7'-4"							
33			21'-0"	PCS619				7'-6"		7'-6"							
34			21'-7"	PCS620				7'-9½"		7'-9½"							
35			22'-2"	PCS621				8'-1"		8'-1"							
36			22'-10"	PCS622				8'-5"		8'-5"							
37	↑	↑	23'-7"	PCS623	↑	↑	↑	8'-9½"	↑	8'-9½"		↑					
38	4	6	24'-7"	PCS624	T1	0'-5½"	2'-6½"	9'-3½"	2'-6½"	9'-3½"		0'-5½"					
39																	
40																	
41	PIER C CAP STEEL																
42	(PIER N SIMILAR)																
43	Similar to Pier A except with following additions																
44																	
45	82	7	14'-0"	PCC 700	St		6'-2"	6'-8"	6'-2"								
46																	
47	7	5	34'-0"	PCC 500	Str.												
48																	
49																	
50	PIER E CAP STEEL																
51	(PIERS D, F, G, H, J, K, O, P, Q, R, S, T, U SIMILAR)																
52	10	11	37'-2"	PCE1101	1	1'-7"	34'-0"					1'-7"		1'-2"			34'-0"
53																	
54	4	10	34'-0"	PCE1000	Str												
55	2	10	29'-2"	PCE1001	Str												
56	2	10	17'-6"	PCE1002	Str												
57	2	10	12'-0"	PCE1003	Str												
58																	
59	4	6	17'-4"	PCS625	T1	0'-5½"	2'-6½"	5'-8"	2'-6½"	5'-8"		0'-5½"					
60	↓	↓	17'-5"	PCS626	↓	↓	↓	5'-8½"	↓	5'-8½"		↓					
61			17'-8"	PCS627				5'-10"		5'-10"							
62			17'-11"	PCS628				5'-11½"		5'-11½"							
63			18'-4"	PCS629				6'-2"		6'-2"							
64			18'-10"	PCS630				6'-5"		6'-5"							
65			19'-6"	PCS631				6'-9"		6'-9"							
66			20'-4"	PCS632				7'-2"		7'-2"							
67			21'-2"	PCS633				7'-7"		7'-7"							
68			22'-2"	PCS634				8'-1"		8'-1"							
69	↑	↑	23'-4"	PCS635	↑	↑	↑	8'-8"	↑	8'-8"		↑					
70	4	6	24'-10"	PCS636	T1	0'-5½"	2'-6½"	9'-5"	2'-6½"	9'-5"		0'-5½"					
71																	
72																	
73																	
74																	
75																	
76																	
77																	
78																	
79																	
80																	
81																	

Item	No Pieces	Size	Length	Mark	Type	A	B	C	D	E	F	G	H	J	K	R	O
82																	
83																	
84																	
85																	
86																	
87																	
88																	
89																	
90																	
91																	
92																	
93																	
94																	
95																	
96																	
97																	
98																	
99																	
100																	
101																	
102																	
103																	
104																	
105																	
106																	
107																	
108																	
109																	
110																	
111																	
112																	
113																	
114																	
115																	
116																	
117																	
118																	
119																	
120																	
121																	
122																	
123																	
124																	
125																	
126																	
127																	
128																	
129																	
130																	
131																	
132																	
133																	
134																	
135																	
136																	
137																	
138																	
139																	
140																	
140																	
141																	
142																	
143																	
144																	
145																	
146																	
147																	
148																	
149																	
150																	
151																	
152																	
153																	
154																	
155																	
156																	
157																	
158																	
159																	
160																	
161																	
162																	

TYPICAL BAR BENDS

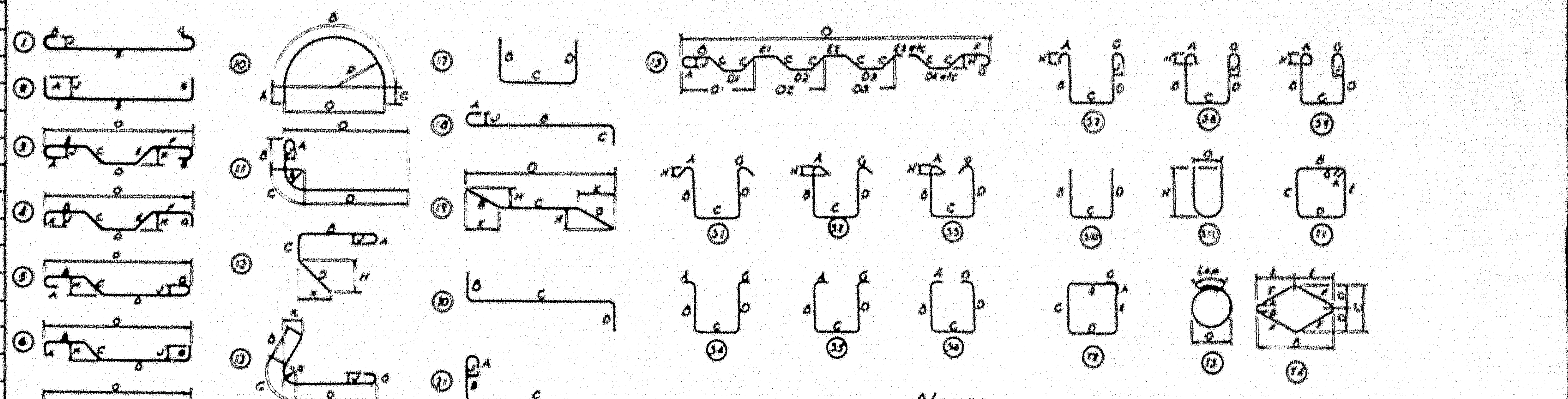
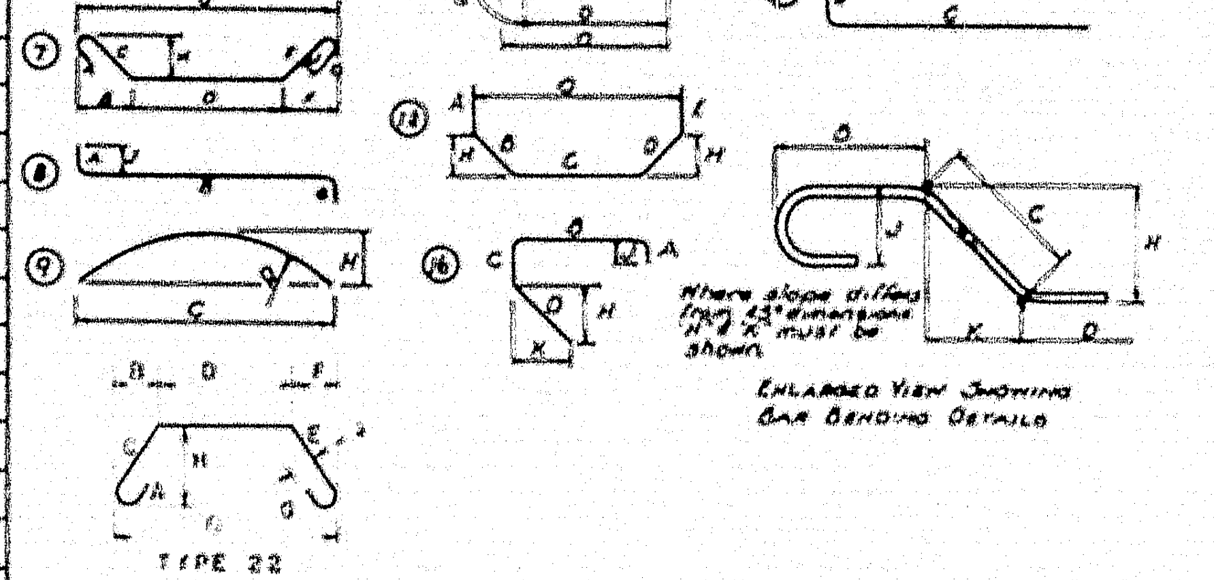
TYPE 22
Enlarged view showing bar bending details
Where slope differs from 45° dimensions H & K must be shown

NOTES

1. All dimensions are out to out of bar
2. 'J' dimensions on 180° hooks to be shown only where necessary to restrict hook size, otherwise standard hooks are to be used
3. Where 'J' is not shown, 'J' will be kept equal to or less than 'H'. Where 'J' can exceed 'H', it should be shown
4. 'H' dimension on stirrups to be shown where necessary to restrict hooks
5. Where bars are to be bent more accurately than standard bending tolerances, bending dimensions which require closer working should have limits indicated.
6. Figures in circles show types
7. No allowance for bend curvature is to be made except for standard hook & radii in excess of same

Item	No Pieces	Size	Length	Mark	Type	A	B	C	D	E	F	G	H	J	K	R	O
163																	
164																	
165																	
166																	
167																	
168																	
169																	
170																	
171																	
172																	
173																	
174																	
175																	
176																	
177																	
178																	
179																	
180																	
181																	
182																	
183																	
184																	
185																	
186																	
187																	
188																	
189																	
190																	

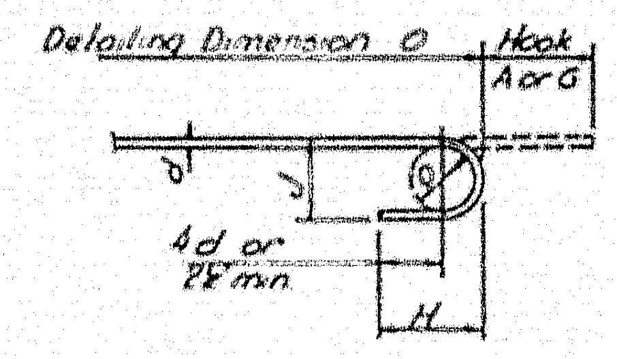

STANDARD HOOK DETAIL

BAR SIZES

Equivalent Size	Present (Numbers)
¼"⌀	#2
⅜"⌀	#3
½"⌀	#4
⅝"⌀	#5
¾"⌀	#6
⅞"⌀	#7
1"⌀	#8
1"□	#9
1⅛"□	#10
1¼"□	#11

8. Bar reinforcement metal shall conform to the requirements of the Standard Specifications for new Billet-Steel Concrete Reinforcement Bars (Intermediate Grade) Serial Designation A.A.S.H.O. M31-48 or its latest revision.
All bars shall be deformed to conform with A.S.T.M. Specifications A305-49.

THE CLARKESON ENGINEERING CO., INC.

DESIGN C J M	CHECK H P	BRIDGE NO. SURVEY
DRAWN F E T	APPROVED WAH - C J M	PLOT

STATE HIGHWAY COMMISSION

INTERSTATE #95
OVER
MESSALONSKEE STREAM & QUARRY ROAD (RELOC.)
IN THE CITY OF
WATERVILLE
KENNEBEC COUNTY

CAP STEEL

SHEET 13 OF 13 SHEETS
AUGUSTA, MAINE

78-210

0 1 2 3 4 5 INCHES